L03.6L
CA

Service
Service
Service

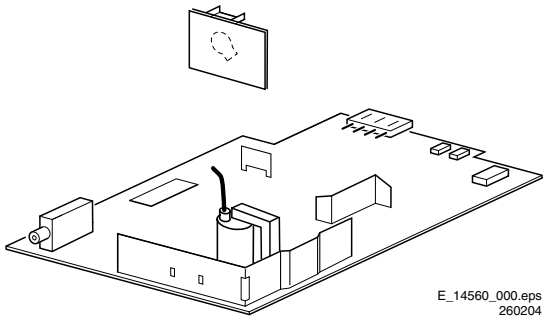

E_14560_000.eps
260204

Service Manual

Contents **Page**

1.	Technical Specifications, Connections, and Chassis Overview		2
2.	Safety Instructions, Warnings, and Notes		4
3.	Directions for Use		7
4.	Mechanical Instructions		8
5.	Service Modes, Error Codes, and Fault Finding		9
6.	*Block Diagrams, Test Point Overviews, and Waveforms*		
	Block Diagram		13
	I2C and Supply Voltage Overview		14
	Testpoint Overview Mono Carrier and CRT Panel		15
7.	*Circuit Diagrams and PWB Layouts*	*Diagram*	*PWB*
	Mono Carrier: Power Supply	(A1)16	23-24
	Mono Carrier: Deflection	(A2)17	23-24
	Mono Carrier: Tuner IF	(A3)18	23-24
	Mono Carrier: Video Processing	(A4)19	23-24
	Mono Carrier: Audio - BTSC Stereo Decoder	(A5)20	23-24
	Mono Carrier: Audio Amplifier + Mono Sound Processing	(A6)21	23-24
	Mono Carrier: Front I/O + Front Control + Headphone	(A7)22	23-24
	CRT Panel	(B1)25	26
8.	Alignments		27
9.	Circuit Descriptions, List of Abbreviations, and IC Data Sheets		34
	Abbreviation List		36
10.	Spare Parts List		37
11.	Revision List		37

©Copyright 2006 Philips Consumer Electronics B.V. Eindhoven, The Netherlands.
All rights reserved. No part of this publication may be reproduced, stored in a retrieval system or transmitted, in any form or by any means, electronic, mechanical, photocopying, or otherwise without the prior permission of Philips.

Published by WS 0667 BG CD Customer Service Printed in the Netherlands Subject to modification EN 3122 785 16560

PHILIPS

1. Technical Specifications, Connections, and Chassis Overview

Index of this chapter:

1.1 Technical Specifications
1.2 Connection Overview
1.3 Chassis Overview

Note: Figures below can deviate slightly from the actual situation, due to the different set executions.

1.1 Technical Specifications

1.1.1 Vision

Display type	:	CRT, DV, FSQ
Screen size	:	14” (36 cm), 4:3
	:	20” (51 cm), 4:3
Tuning system	:	PLL
TV Colour systems	:	NTSC M/N, PAL M
Video playback	:	NTSC M/N 3.58, 4.43
	:	PAL B/G
Channel selections	:	181 presets
	:	Full-Cable

1.1.2 Sound

Sound systems	:	FM-mono
	:	BTSC with SAP
Maximum power (W_{RMS})	:	1 x 3

1.1.3 Miscellaneous

Power supply:

- Mains voltage (V_{AC})	:	100-250
- Mains frequency (Hz)	:	50 / 60

Power consumption (values are indicative)

- Normal operation (W)	:	36 (14”)
	:	46 (20”)
- Stand-by (W)	:	< 1

Dimensions (WxHxD cm)	:	36.2 x 35.0 x 35.4 (14”)
	:	49.1 x 44.9 x 46.3 (20”)
Weight (kg)	:	8.7 (14”)
	:	15.6 (20”)

Ambient conditions:

- Temperature range (°C)	:	+5 to +40
- Maximum humidity	:	90% R.H.

1.2 Connection Overview

Note: The following connector colour abbreviations are used (acc. to DIN/IEC 757): Bk= Black, Bu= Blue, Gn= Green, Gy= Grey, Rd= Red, Wh= White, and Ye= Yellow.

1.2.1 Front Connections

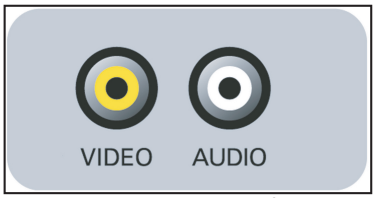

G_16560_006.eps
130706

Figure 1-1 Front connections (*to be updated*)

Cinch: Video CVBS - In, Audio - In

Ye - Video CVBS	1 V_{PP} / 75 ohm	
Wh - Audio	0.2 V_{RMS} / 10 kohm	

1.2.2 Rear Connections

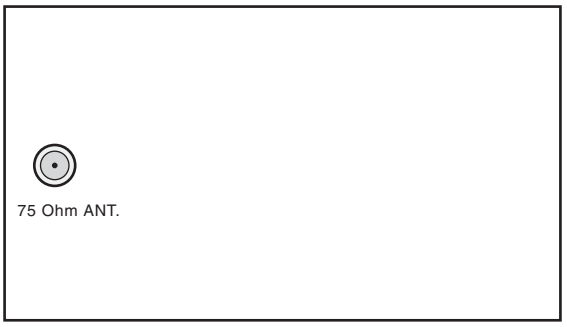

E_14560_015.eps
260204

Figure 1-2 Rear connections *(needs to be checked)*

FM Ant

1	- F type	75 ohm, coax	

1.3 Chassis Overview

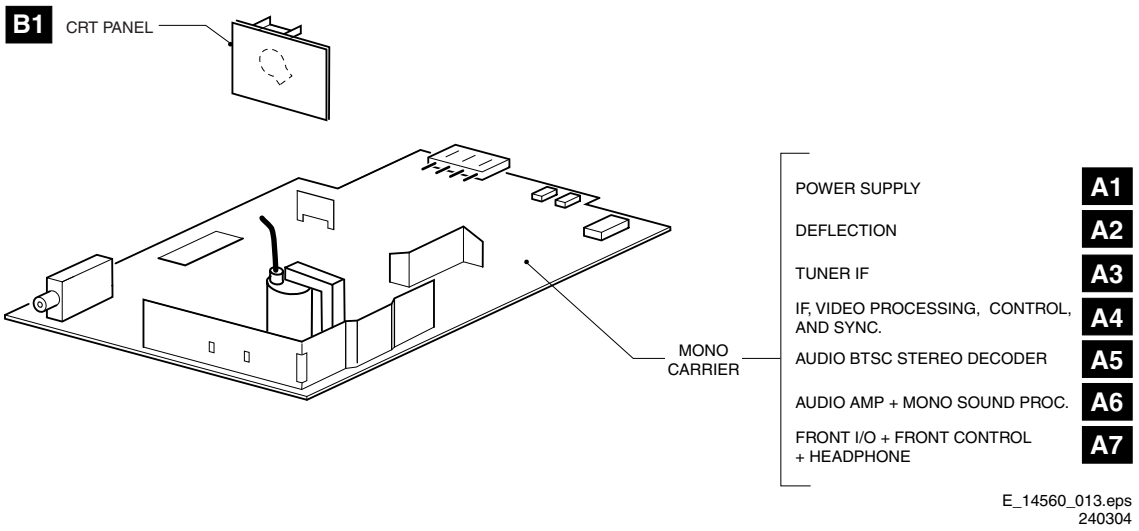

Figure 1-3 Chassis overview

2. Safety Instructions, Warnings, and Notes

Index of this chapter:

2.1 Safety Instructions
2.2 Maintenance Instructions
2.3 Warnings
2.4 Notes

2.1 Safety Instructions

Safety regulations require the following **during** a repair:

- Connect the set to the Mains/AC Power via an isolation transformer (> 800 VA).
- Replace safety components, indicated by the symbol ⚠, only by components identical to the original ones. Any other component substitution (other than original type) may increase risk of fire or electrical shock hazard.
- Wear safety goggles when you replace the CRT.

Safety regulations require that **after** a repair, the set must be returned in its original condition. Pay in particular attention to the following points:

- General repair instruction: as a strict precaution, we advise you to re-solder the solder connections through which the horizontal deflection current flows. In particular this is valid for the:
  1. Pins of the line output transformer (LOT).
  2. Fly-back capacitor(s).
  3. S-correction capacitor(s).
  4. Line output transistor.
  5. Pins of the connector with wires to the deflection coil.
  6. Other components through which the deflection current flows.

Note: This re-soldering is advised to prevent bad connections due to metal fatigue in solder connections, and is therefore only necessary for television sets more than two years old.

- Route the wire trees and EHT cable correctly and secure them with the mounted cable clamps.
- Check the insulation of the Mains/AC Power lead for external damage.
- Check the strain relief of the Mains/AC Power cord for proper function, to prevent the cord from touching the CRT, hot components, or heat sinks.
- Check the electrical DC resistance between the Mains/AC Power plug and the secondary side (only for sets that have a Mains/AC Power isolated power supply):
  1. Unplug the Mains/AC Power cord and connect a wire between the two pins of the Mains/AC Power plug.
  2. Set the Mains/AC Power switch to the "on" position (keep the Mains/AC Power cord unplugged!).
  3. Measure the resistance value between the pins of the Mains/AC Power plug and the metal shielding of the tuner or the aerial connection on the set. The reading should be between 4.5 Mohm and 12 Mohm.
  4. Switch "off" the set, and remove the wire between the two pins of the Mains/AC Power plug.
- Check the cabinet for defects, to prevent touching of any inner parts by the customer.

2.2 Maintenance Instructions

We recommend a maintenance inspection carried out by qualified service personnel. The interval depends on the usage conditions:

- When a customer uses the set under normal circumstances, for example in a living room, the recommended interval is three to five years.
- When a customer uses the set in an environment with higher dust, grease, or moisture levels, for example in a kitchen, the recommended interval is one year.
- The maintenance inspection includes the following actions:
  1. Perform the “general repair instruction” noted above.
  2. Clean the power supply and deflection circuitry on the chassis.
  3. Clean the picture tube panel and the neck of the picture tube.

2.3 Warnings

- In order to prevent damage to ICs and transistors, avoid all high voltage flashovers. In order to prevent damage to the picture tube, use the method shown in figure “Discharge picture tube”, to discharge the picture tube. Use a high voltage probe and a multi-meter (position V_{DC}). Discharge until the meter reading is 0 V (after approx. 30 s).

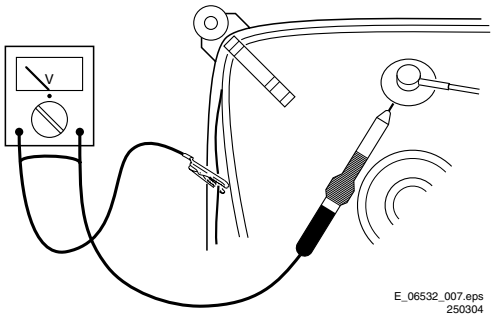

Figure 2-1 Discharge picture tube

- All ICs and many other semiconductors are susceptible to electrostatic discharges (ESD ⚠). Careless handling during repair can reduce life drastically. Make sure that, during repair, you are connected with the same potential as the mass of the set by a wristband with resistance. Keep components and tools also at this same potential. Available ESD protection equipment:
  – Complete kit ESD3 (small table mat, wristband, connection box, extension cable and earth cable) 4822 310 10671.
  – Wristband tester 4822 344 13999.
- Be careful during measurements in the high voltage section.
- Never replace modules or other components while the unit is switched "on".
- When you align the set, use plastic rather than metal tools. This will prevent any short circuits and prevents circuits from becoming unstable.

2.4 Notes

2.4.1 General

- Measure the voltages and waveforms with regard to the chassis (= tuner) ground (⏚), or hot ground (⏚), depending on the tested area of circuitry. The voltages and waveforms shown in the diagrams are indicative. Measure them in the Service Default Mode (see chapter 5) with a colour bar signal and stereo sound (L: 3 kHz, R: 1 kHz unless stated otherwise) and picture carrier at 475.25 MHz for PAL, or 61.25 MHz for NTSC (channel 3).
- Where necessary, measure the waveforms and voltages with (⏋⏌) and without (⏋⏌) aerial signal. Measure the voltages in the power supply section both in normal operation (⏻) and in stand-by (⏻). These values are indicated by means of the appropriate symbols.
- The semiconductors indicated in the circuit diagram and in the parts lists, are interchangeable per position with the

semiconductors in the unit, irrespective of the type indication on these semiconductors.
- Manufactured under license from Dolby Laboratories. “Dolby”, “Pro Logic” and the “double-D symbol”, are trademarks of Dolby Laboratories.

2.4.2 Schematic Notes

- All resistor values are in ohms, and the value multiplier is often used to indicate the decimal point location (e.g. 2K2 indicates 2.2 kohm).
- Resistor values with no multiplier may be indicated with either an "E" or an "R" (e.g. 220E or 220R indicates 220 ohm).
- All capacitor values are given in micro-farads (μ= x10^{-6}), nano-farads (n= x10^{-9}), or pico-farads (p= x10^{-12}).
- Capacitor values may also use the value multiplier as the decimal point indication (e.g. 2p2 indicates 2.2 pF).
- An "asterisk" (*) indicates component usage varies. Refer to the diversity tables for the correct values.
- The correct component values are listed in the Spare Parts List. Therefore, always check this list when there is any doubt.

2.4.3 Rework on BGA (Ball Grid Array) ICs

General
Although (LF)BGA assembly yields are very high, there may still be a requirement for component rework. By rework, we mean the process of removing the component from the PWB and replacing it with a new component. If an (LF)BGA is removed from a PWB, the solder balls of the component are deformed drastically so the removed (LF)BGA has to be discarded.

Device Removal
As is the case with any component that is being removed, it is essential when removing an (LF)BGA, that the board, tracks, solder lands, or surrounding components are not damaged. To remove an (LF)BGA, the board must be uniformly heated to a temperature close to the reflow soldering temperature. A uniform temperature reduces the risk of warping the PWB. To do this, we recommend that the board is heated until it is certain that all the joints are molten. Then carefully pull the component off the board with a vacuum nozzle. For the appropriate temperature profiles, see the IC data sheet.

Area Preparation
When the component has been removed, the vacant IC area must be cleaned before replacing the (LF)BGA.
Removing an IC often leaves varying amounts of solder on the mounting lands. This excessive solder can be removed with either a solder sucker or solder wick. The remaining flux can be removed with a brush and cleaning agent.
After the board is properly cleaned and inspected, apply flux on the solder lands and on the connection balls of the (LF)BGA.
Note: Do not apply solder paste, as this has been shown to result in problems during re-soldering.

Device Replacement
The last step in the repair process is to solder the new component on the board. Ideally, the (LF)BGA should be aligned under a microscope or magnifying glass. If this is not possible, try to align the (LF)BGA with any board markers. So as not to damage neighbouring components, it may be necessary to reduce some temperatures and times.

More Information
For more information on how to handle BGA devices, visit this URL: *www.atyourservice.ce.philips.com* (needs subscription, not available for all regions). After login, select “Magazine”, then go to “Repair downloads”. Here you will find Information on how to deal with BGA-ICs.

2.4.4 Lead-free Solder

Philips CE is producing lead-free sets (PBF) from 1.1.2005 onwards.

Identification: The bottom line of a type plate gives a 14-digit serial number. Digits 5 and 6 refer to the production year, digits 7 and 8 refer to production week (in example below it is 1991 week 18).

Figure 2-2 Serial number example

Regardless of the special lead-free logo (which is not always indicated), one must treat all sets from this date onwards according to the rules as described below.

Figure 2-3 Lead-free logo

Due to lead-free technology some rules have to be respected by the workshop during a repair:
- Use only lead-free soldering tin Philips SAC305 with order code 0622 149 00106. If lead-free solder paste is required, please contact the manufacturer of your soldering equipment. In general, use of solder paste within workshops should be avoided because paste is not easy to store and to handle.
- Use only adequate solder tools applicable for lead-free soldering tin. The solder tool must be able:
  - To reach a solder-tip temperature of at least 400°C.
  - To stabilise the adjusted temperature at the solder-tip.
  - To exchange solder-tips for different applications.
- Adjust your solder tool so that a temperature of around 360°C - 380°C is reached and stabilised at the solder joint. Heating time of the solder-joint should not exceed ~ 4 sec. Avoid temperatures above 400°C, otherwise wear-out of tips will increase drastically and flux-fluid will be destroyed. To avoid wear-out of tips, switch “off” unused equipment or reduce heat.
- Mix of lead-free soldering tin/parts with leaded soldering tin/parts is possible but PHILIPS recommends strongly **to avoid** mixed regimes. If this cannot be avoided, carefully clean the solder-joint from old tin and re-solder with new tin.
- Use only original spare-parts listed in the Service-Manuals. Not listed standard material (commodities) has to be purchased at external companies.
- Special information for lead-free BGA ICs: these ICs will be delivered in so-called "dry-packaging" to protect the IC against moisture. This packaging may only be opened shortly before it is used (soldered). Otherwise the body of the IC gets "wet" inside and during the heating time the structure of the IC will be destroyed due to high (steam-) pressure inside the body. If the packaging was opened before usage, the IC has to be heated up for some hours (around 90°C) for drying (think of ESD-protection!).
  Do not re-use BGAs at all!
- For sets produced before 1.1.2005, containing leaded soldering tin and components, all needed spare parts will be available till the end of the service period. For the repair of such sets nothing changes.

In case of doubt whether the board is lead-free or not (or with mixed technologies), you can use the following method:

- Always use the highest temperature to solder, when using SAC305 (see also instructions below).
- De-solder thoroughly (clean solder joints to avoid mix of two alloys).

Caution: For BGA-ICs, you **must** use the correct temperature-profile, which is coupled to the 12NC. For an overview of these profiles, visit the website *www.atyourservice.ce.philips.com* (needs subscription, but is not available for all regions)
You will find this and more technical information within the "Magazine", chapter "Repair downloads".
For additional questions please contact your local repair help desk.

2.4.5 Alternative BOM identification

In September 2003, Philips CE introduced a change in the way the serial number (or production number, see Figure 2-2) is composed. From this date on, the **third digit** in the serial number (example: AG**2**B0335000001) indicates the number of the alternative BOM (Bill of Materials used for producing the specific model of TV set). It is possible that the same TV model on the market is produced with e.g. two different types of displays, coming from two different O.E.M.s.
By looking at the third digit of the serial number, the service technician can see if there is more than one type of B.O.M. used in the production of the TV set he is working with. He can then consult the At Your Service Web site, where he can type in the Commercial Type Version Number of the TV set (e.g. 28PW9515/12), after which a screen will appear that gives information about the number of alternative B.O.M.s used.
If the third digit of the serial number contains the number 1 (example: AG**1**B033500001), then there is only one B.O.M. version of the TV set on the market. If the third digit is a 2 (example: AG**2**B0335000001), then there are two different B.O.M.s. ***Information about this is important for ordering the correct spare parts!***
For the third digit, the numbers 1...9 and the characters A...Z can be used, so in total: 9 plus 26 = 35 different B.O.M.s can be indicated by the third digit of the serial number.

2.4.6 Practical Service Precautions

- **It makes sense to avoid exposure to electrical shock.** While some sources are expected to have a possible dangerous impact, others of quite high potential are of limited current and are sometimes held in less regard.
- **Always respect voltages**. While some may not be dangerous in themselves, they can cause unexpected reactions that are best avoided. Before reaching into a powered TV set, it is best to test the high voltage insulation. It is easy to do, and is a good service precaution.

3. Directions for Use

You can download this information from the following websites:
http://www.philips.com/support
http://www.p4c.philips.com

4. Mechanical Instructions

Index of this chapter:

4.1 Rear Cover Removal
4.2 Service Position Main Panel
4.3 Rear Cover Mounting

4.1 Rear Cover Removal

1. Remove all fixation screws of the rear cover.
2. Now pull the rear cover in backward direction to remove it.

4.2 Service Position Main Panel

1. Disconnect the strain relief of the AC power cord.
2. Remove the main panel, by pushing the two centre clips outward [1]. At the same time pull the panel away from the CRT [2].
3. If necessary, disconnect the degaussing coil by removing the cable from the (red) connector 1512.
4. Move the panel somewhat to the left and flip it 90 degrees [3], with the components towards the CRT.

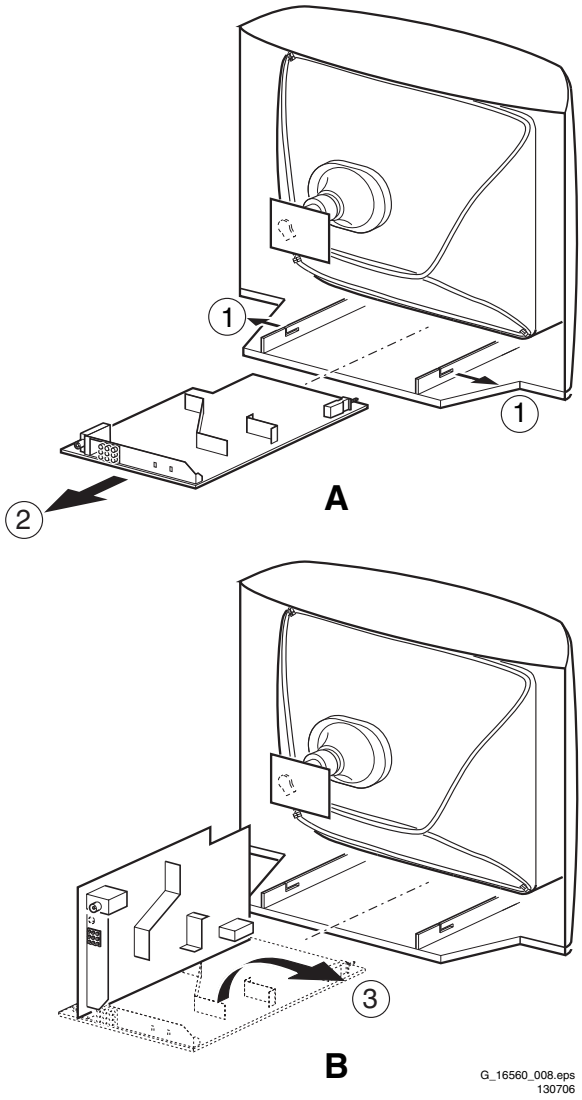

Figure 4-1 Service Position

4.3 Rear Cover Mounting

Before you mount the rear cover, perform the following checks:

1. Check whether the mains cord is mounted correctly in its guiding brackets.
2. Re-place the strain relief of the AC power cord into the cabinet.
3. Check whether all cables are replaced in their original position

5. Service Modes, Error Codes, and Fault Finding

Index of this chapter:

5.1 Test Points
5.2 Service Modes
5.3 Problems and Solving Tips
5.4 Service Tools
5.5 Error Codes
5.6 The Blinking LED Procedure
5.7 Protections
5.8 Repair Tips

5.1 Test Points

This chassis is equipped with test points in the service printing. In the schematics test points are identified with a rectangle box around Fxxx or Ixxx. On the PCB, test points are specifically mentioned in the service manual as “half moons” with a dot in the centre.

Perform measurements under the following conditions:
- Service Default Alignment Mode.
- Video: colour bar signal.
- Audio: 3 kHz left, 1 kHz right.

5.2 Service Modes

Service Default Alignment Mode (SDAM) offers several features for the service technician.

There is also the option of using ComPair, a hardware interface between a computer (see requirements below) and the TV chassis. It offers the ability of structured trouble shooting, test pattern generation, error code reading, software version read-out, and software upgrading.
Minimum Requirements: a Pentium Processor, Windows 95/ 98, and a CD-ROM drive (see also paragraph “ComPair”).

Table 5-1 SW Cluster

SW Cluster	Software name	UOC type	UOC Diversity	Special Features
L06SP	L036LM x.y	TDA9370	55K ROM Size	Mono
Abbreviations in Software name: U = Nafta, M = Mono, N = Stereo.				

5.2.1 Service Default Alignment Mode (SDAM)

Purpose
- To change option settings.
- To create a predefined setting to get the same measurement results as given in this manual.
- To display / clear the error code buffer.
- To override SW protections.
- To perform alignments.
- To start the blinking LED procedure.

Specifications

Table 5-2 SDM default settings

Region	Freq. (MHz)	Default system
Europe, AP-PAL/Multi	475.25	PAL B/G
NAFTA, AP-NTSC, LATAM	61.25 (ch. 3)	NTSC M

- All picture settings at 50% (brightness, colour contrast, hue).
- Bass, treble and balance at 50%; volume at 25%.
- All service-unfriendly modes (if present) are disabled, like:
  - (Sleep) timer,
  - Child/parental lock,
  - Blue mute,
  - Hotel/hospitality mode
  - Auto switch-off (when no “IDENT” video signal is received for 15 minutes),
  - Skip / blank of non-favourite presets / channels,
  - Auto store of personal presets,
  - Auto user menu time-out.
- Operation hours counter.
- Software version.
- Option settings.
- Error buffer reading and erasing.
- Software alignments.

How to enter SDAM

Use one of the following methods:
- Use a standard customer RC-transmitter and key in the code 062596 directly followed by the “M” (menu) button or
- Short jumper wires 9448 and pin 4 of 7200 on the mono carrier (see Fig. 8-1) and apply AC power. Then press the power button (remove the short after start-up).
  Caution: Entering SDAM by shortening wires 9448 and pin 4 of 7200 will override the +8V-protection. Do this only for a short period. When doing this, the service-technician must know exactly what he is doing, as it could lead to damaging the set.
- Or via ComPair.

After entering SDAM, the following screen is visible, with S at the upper right side for recognition.

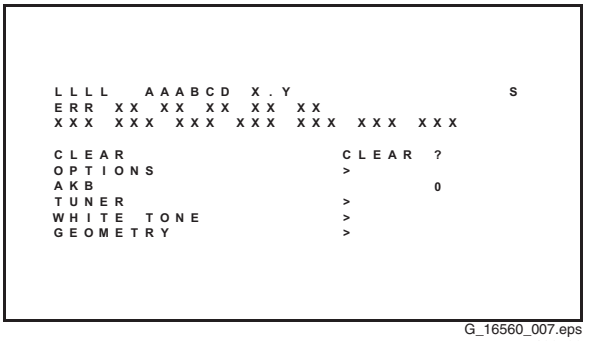

G_16560_007.eps
130706

Figure 5-1 SDAM menu (example)

- **LLLL.** This is the operation hours counter. It counts the normal operation hours, not the stand-by hours.
- **AAABCD-X.Y.** This is the software identification of the main micro controller:
  - A = the project name (L03 2006).
  - B = the region: E= Europe, A= Asia Pacific, U= NAFTA, L= LATAM.
  - C = the feature of software diversity: N = stereo non-DBX, S = stereo dBx, M = mono, D = DVD
  - D = the language cluster number:
  - X = the main software version number.
  - Y = the sub software version number.
- **S.** Indication of the actual mode. S= SDAM= Service Default Alignment mode.
- **Error buffers.** Five errors possible.
- **Option bytes.** Seven codes possible.
- **Clear.** Erase the contents of the error buffer. Select the CLEAR menu item and press the CURSOR RIGHT key. The content of the error buffer is cleared.
- **Options.** To set the Option Bytes. See chapter 8.3.1 for a detailed description.

- **AKB.** Disable (0) or enable (1) the “black current loop” (AKB = Auto Kine Bias).
- **Tuner.** To align the Tuner. See chapter 8.3.2 for a detailed description.
- **White Tone.** To align the White Tone. See chapter 8.3.3 for a detailed description.
- **Geometry.** To align the set geometry. See chapter 8.3.4 for a detailed description.

How to navigate
- In SDAM, select menu items with the CURSOR UP/DOWN key on the remote control transmitter. The selected item will be highlighted. When not all menu items fit on the screen, move the CURSOR UP/DOWN key to display the next / previous menu items.
- With the CURSOR LEFT/RIGHT keys, it is possible to:
  – Activate the selected menu item.
  – Change the value of the selected menu item.
  – Activate the selected submenu.
- When you press the MENU button twice, the set will switch to the normal user menus (with the SDAM mode still active in the background). To return to the SDAM menu press the OSD / STATUS button.
- When you press the MENU key in a submenu, you will return to the previous menu.

How to store settings
To store settings, leave the SDAM mode with the Stand-by button on the remote.

How to exit
Switch the set to STANDBY by pressing the power button on the remote control (if you switch the set 'off' by removing the AC power, the set will return in SDAM when AC power is re-applied). The error buffer is **not** cleared.

5.3 Problems and Solving Tips

5.3.1 Picture Problems

Note: Below described problems are all related to the TV settings. The procedures to change the value (or status) of the different settings are described.

No colours / noise in picture
1. Press the MENU button on the remote control.
2. Select the INSTALLATION sub menu.
3. Select and change the SYSTEM setting until picture and sound are correct.
4. Select the STORE menu item.

Colours not correct / unstable picture
1. Press the MENU button on the remote control.
2. Select the INSTALLATION sub menu.
3. Select and change the SYSTEM setting until picture and sound are correct.
4. Select the STORE menu item.

Picture too dark or too bright
Increase / decrease the BRIGHTNESS and / or the CONTRAST value when:
- The picture improves after you have pressed the “Smart Picture” button on the remote control.
- The picture improves after you have switched on the Customer Service Mode

The new “Personal” preference value is automatically stored.

White line around picture elements and text
Decrease the SHARPNESS value when:
- The picture improves after you have pressed the “Smart Picture” button on the remote control.

The new “Personal” preference value is automatically stored.

Snowy picture
- No or bad antenna signal. Connect a proper antenna signal.
- Antenna not connected. Connect the antenna.
- No channel / pre-set is stored at this program number. Go to the INSTALL menu and store a proper channel at this program number.
- The tuner is faulty (in this case the CODES line will contain error number 10). Check the tuner and replace / repair if necessary.

Snowy picture and/or unstable picture
- A scrambled or decoded signal is received.

Black and white picture
Increase the COLOR value when:
- The picture improves after you have pressed the “Smart Picture” button on the remote control.

The new “Personal” preference value is automatically stored.

Menu text not sharp enough
Decrease the CONTRAST value when:
The picture improves after you have pressed the “Smart Picture” button on the remote control.
The new “Personal” preference value is automatically stored.

5.3.2 Sound Problems

No sound or sound too loud (after channel change / switching on)
Increase / decrease the VOLUME level.
Press the Smart Sound button repeatedly to access 4 different types of sound settings and choose your desired setting.

5.4 Service Tools

5.4.1 ComPair

Introduction
ComPair (Computer Aided Repair) is a service tool for Philips Consumer Electronics products. ComPair is a further development on the European DST (service remote control), which allows faster and more accurate diagnostics. ComPair has three big advantages:
1. ComPair helps you to quickly get an understanding on how to repair the chassis in a short time by guiding you systematically through the repair procedures.
2. ComPair allows very detailed diagnostics (on I^2C level) and is therefore capable of accurately indicating problem areas. You do not have to know anything about I^2C commands yourself because ComPair takes care of this.
3. ComPair speeds up the repair time since it can automatically communicate with the chassis (when the microprocessor is working) and all repair information is directly available. When ComPair is installed together with the Force/SearchMan electronic manual of the defective chassis, schematics and PWBs are only a mouse click away.

Specifications
ComPair consists of a Windows based fault finding program and an interface box between PC and the (defective) product. The ComPair interface box is connected to the PC via a serial (or RS-232) cable.
For this chassis, the ComPair interface box and the TV communicate via a bi-directional service cable via the service connector(s).

The ComPair fault finding program is able to determine the problem of the defective television. ComPair can gather diagnostic information in two ways:
- Automatically (by communicating with the television): ComPair can automatically read out the contents of the

entire error buffer. Diagnosis is done on I²C/UART level. ComPair can access the I²C/UART bus of the television. ComPair can send and receive I²C/UART commands to the microcontroller of the television. In this way, it is possible for ComPair to communicate (read and write) to devices on the I²C/UART buses of the TV-set.

- Manually (by asking questions to you): Automatic diagnosis is only possible if the microcontroller of the television is working correctly and only to a certain extent. When this is not the case, ComPair will guide you through the fault finding tree by asking you questions *(e.g. Does the screen give a picture? Click on the correct answer: YES / NO)* and showing you examples *(e.g. Measure test-point I7 and click on the correct oscillogram you see on the oscilloscope)*. You can answer by clicking on a link *(e.g. text or a waveform picture)* that will bring you to the next step in the fault finding process.

By a combination of automatic diagnostics and an interactive question / answer procedure, ComPair will enable you to find most problems in a fast and effective way.

How to Connect

This is described in the chassis fault finding database in ComPair.

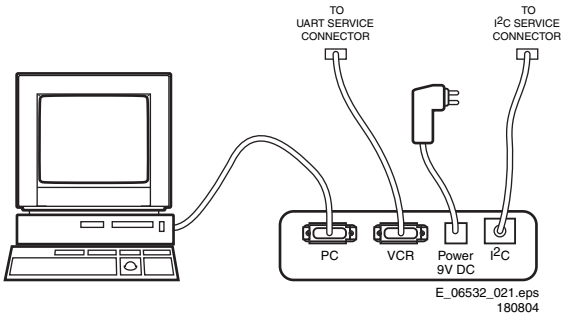

Figure 5-2 ComPair interface connection

How to Order

ComPair order codes (EU/AP/LATAM):

- Starter kit ComPair32/SearchMan32 software and ComPair interface (excl. transformer): 3122 785 90450.
- ComPair interface (excl. transformer): 4822 727 21631.
- Starter kit ComPair32 software (registration version): 3122 785 60040.
- Starter kit SearchMan32 software: 3122 785 60050.
- ComPair32 CD (update): 3122 785 60070 (year 2002), 3122 785 60110 (year 2003 onwards).
- SearchMan32 CD (update): 3122 785 60080 (year 2002), 3122 785 60120 (year 2003), 3122 785 60130 (year 2004).
- ComPair firmware upgrade IC: 3122 785 90510.
- Transformer (non-UK): 4822 727 21632.
- Transformer (UK): 4822 727 21633.
- ComPair interface cable: 3122 785 90004.
- ComPair interface extension cable: 3139 131 03791.
- ComPair UART interface cable: 3122 785 90630.

ComPair order codes (US):

- ComPair Software: ST4191.
- ComPair Interface Box: 4822 727 21631.
- AC Adapter: T405-ND.
- ComPair Quick Start Guide: ST4190.
- ComPair interface extension cable: 3139 131 03791.
- ComPair UART interface cable: 3122 785 90630.

Note: If you encounter any problems, contact your local support desk.

5.5 Error Codes

In case of non-intermittent faults, clear the error buffer before you begin the repair. These to ensure that old error codes are no longer present.

If possible, check the entire contents of the error buffer. In some situations, an error code is only the result of another error code and not the actual cause (e.g., a fault in the protection detection circuitry can also lead to a protection).

Table 5-3 Error Code Table

ERROR	Device	Error description	Check item	Diagram
0	Not applicable	No Error	-	-
1	Not applicable	X-Ray Protection (USA)	7421, 2423, 6421, 6422	A2
2	Not applicable	Horizontal Protection	7421, 7422, 7423	A2
3	Not applicable	Vertical Protection	7461, 7462, 7463, 7464, 7465, 7466	A2
4	TDA9853H	Tone control & Audio processor I²C identification error	7861 (Stereo/Sap)	A5
5	TDA93XX	POR 3.3V / 8V Protection	7200, 7541, 7491, 7493, 7496	A4, A1
6	I²C bus	General I²C bus error	7200, 3604, 3605	A4
7	Not applicable	-	-	-
8	Not applicable	E/W Protection (Large Screen)	-	-
9	M24C16	NVM I²C identification error	7641, 3641, 3642, 3643	A4
10	Tuner	Tuner I²C identification error	1000, 3003, 3004	A3
11	Not applicable	Black current loop protection	3313, 7307, 7308, 7309, 7310, 7311, 7312, 7313, 7314, 7315, 7316, 7317, 7318, CRT	B1
12	Not applicable	MAP I²C identification error (USA)	-	-
13	Not applicable	VC I²C identification error (EU)	-	-
14	Not applicable	DVD I²C identification error	-	-

Due to system constraints, the error 2 code indication for 14" and 20" is different. So the error "Horizontal Protection" (error 2 code) is as follows:

- 14" (error code = 2 and 10)
- 20" (error code = 5 and 10)

5.6 The Blinking LED Procedure

Via this procedure, you can make the contents of the error buffer visible via the front LED. This is especially useful when there is no picture.

When the SDAM is entered, the LED will blink the contents of the error-buffer.
- n short blinks (n = 1 - 14),
- When all the error-codes are displayed, the sequence finishes with a LED blink of 3 s,
- The sequence starts again.

Example of error buffer: 12 9 6 0 0
After entering SDAM:
- 12 short blinks followed by a pause of 3 s,
- 9 short blinks followed by a pause of 3 s,
- 6 short blinks followed by a pause of 3 s,
- 1 long blink of 3 s to finish the sequence,
- the sequence starts again.

5.7 Protections

If a fault situation is detected an error code will be generated and if necessary the set will be put in the protection mode. Blinking of the red LED at a frequency of 3 Hz indicates the protection mode. In some error cases, the microprocessor does not put the set in the protection mode. The error codes of the error buffer can be read via the service menu (SDAM), the blinking LED procedure or via ComPair.

To get a quick diagnosis the chassis has one service modes implemented:
- The Service Default Alignment Mode (SDAM). Start-up of the set in a predefined way and adjustment of the set via a menu and with the help of test patterns.

5.8 Repair Tips

Below some failure symptoms are given, followed by a repair tip.
- **Set is dead and makes hiccupping sound.** “Main Supply” is available. Hiccupping stops when de-soldering L5563, meaning that problem is in the “Main Supply” line. No output voltages at LOT, no horizontal deflection. Reason: line transistor 7421 is defective.
- **Set is dead, and makes no sound.** Check power supply IC 7520. Result: voltage at pins 2, 6, 7, 9 and 11 are about 180 V and pin 14 is 0 V. The reason why the voltage on these pins is so high is because the output driver (pin 11) has an open load. That is why MOSFET 7521 is not able to switch. Reason: feedback resistor 3523 is defective. **Caution:** be careful measuring on the gate of 7521; circuitry is very high ohmic and can easily be damaged!
- **Set is in hiccup mode and shuts down after 8 s.** Blinking LED (set in SDM mode) indicates error 5. As it is unlikely that the “POR” and “+8V protection” happen at the same time, measure the “+8V”. If this voltage is missing, check transistor 7491 and 7496.
- **Set is non-stop in hiccup mode.** Set is in over current mode; check the secondary sensing (opto coupler 7515) and the “Main Supply” voltage. Signal “Stdby_con” must be logic low under normal operation conditions and goes to high (3.3 V) under stand-by and fault conditions.
- **Set turns on, but without picture and sound.** The screen shows snow, but OSD and other menus are okay. Blinking LED procedure indicates error 11, so problem is expected in the tuner (pos. 1000). Check presence of supply voltages. As “Vlotaux+5V” at pin 5 and 7 are okay, “VT_supply” at pin 9 is missing. Conclusion: resistor 3449 and 3450 are defective

6. Block Diagrams, Test Point Overviews, and Waveforms

Block Diagram

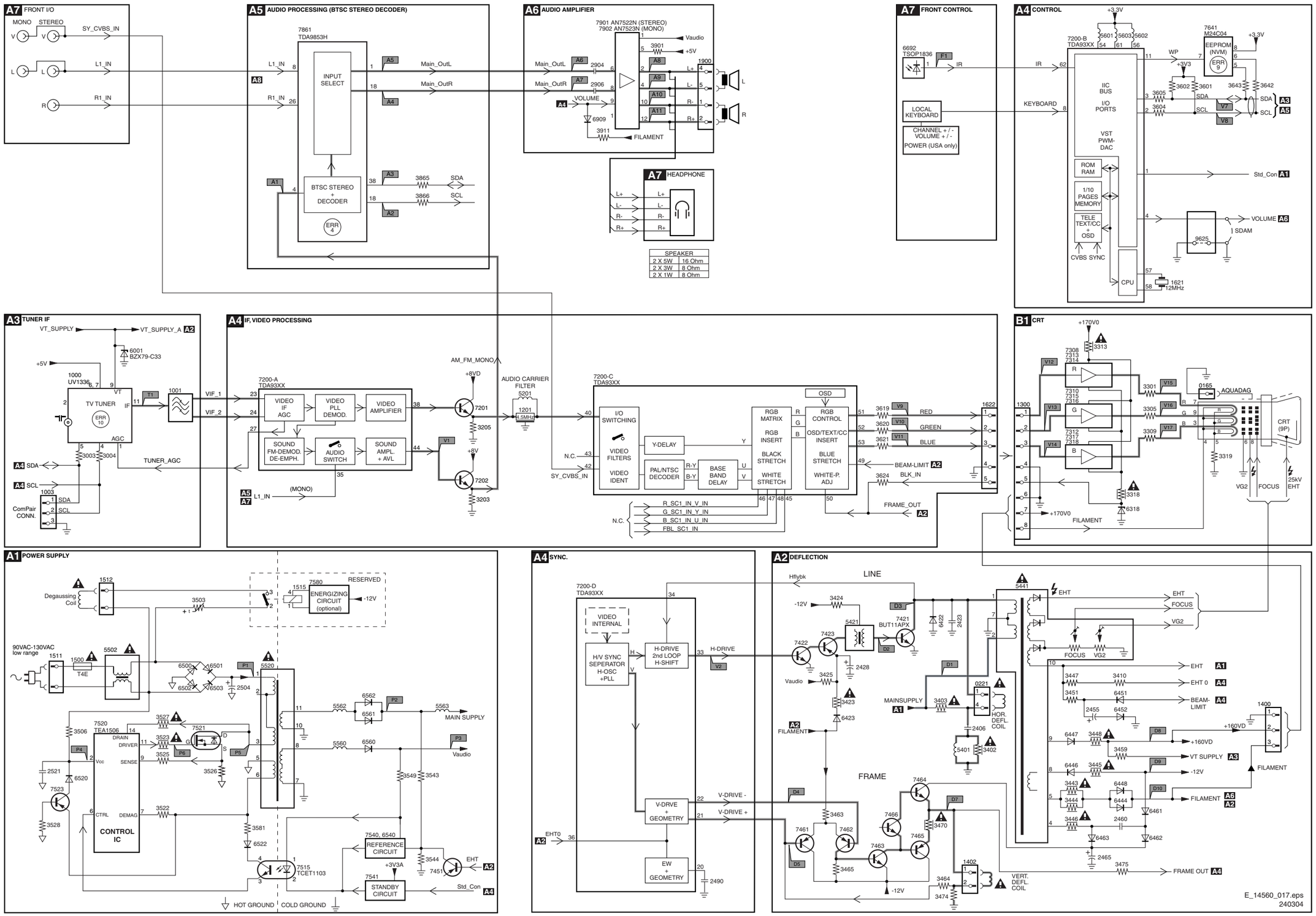

I²C and Supply Voltage Overview

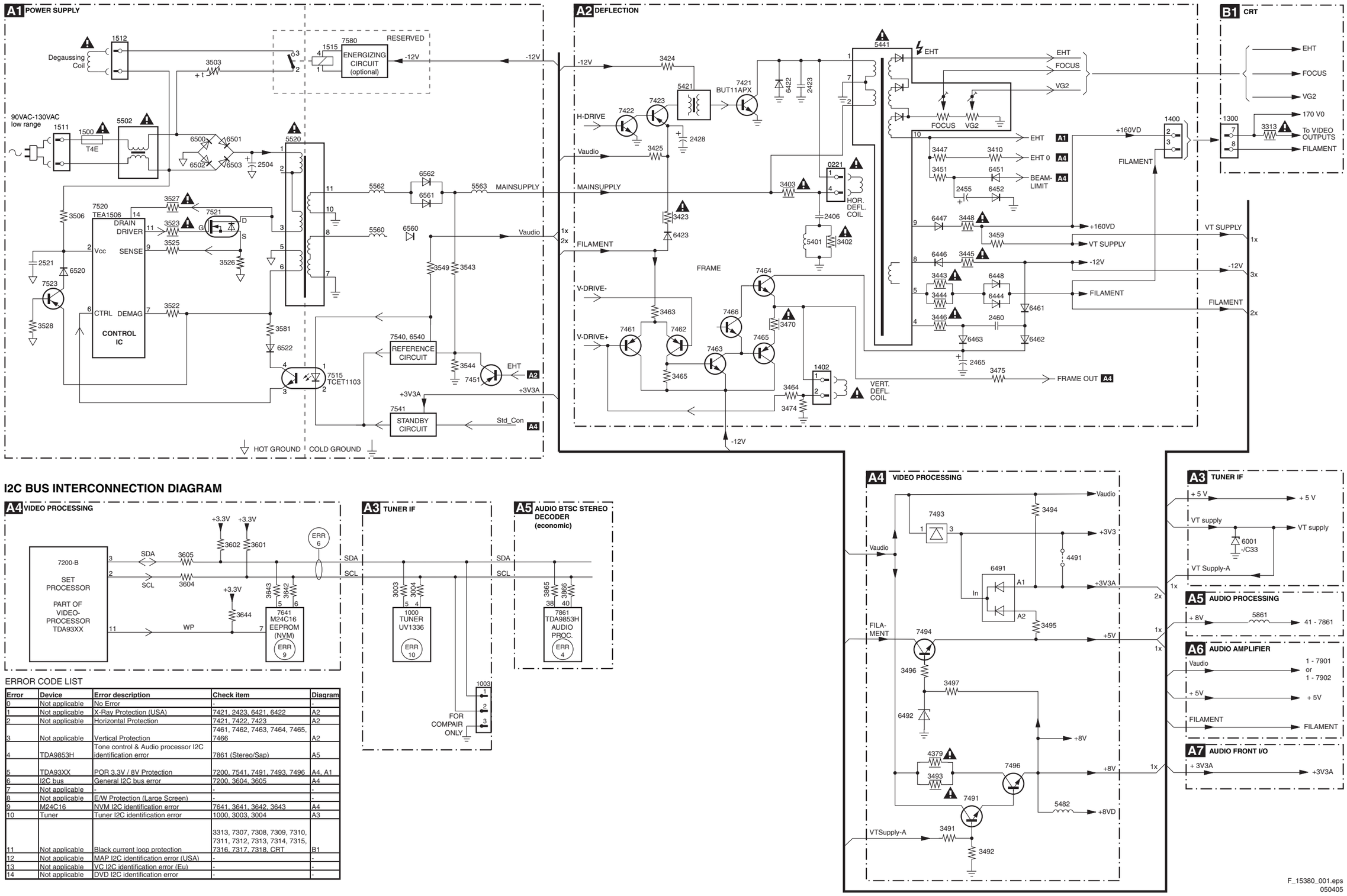

I2C BUS INTERCONNECTION DIAGRAM

ERROR CODE LIST

Error	Device	Error description	Check item	Diagram
0	Not applicable	No Error	-	-
1	Not applicable	X-Ray Protection (USA)	7421, 2423, 6421, 6422	A2
2	Not applicable	Horizontal Protection	7421, 7422, 7423	A2
3	Not applicable	Vertical Protection	7461, 7462, 7463, 7464, 7465, 7466	A2
4	TDA9853H	Tone control & Audio processor I2C identification error	7861 (Stereo/Sap)	A5
5	TDA93XX	POR 3.3V / 8V Protection	7200, 7541, 7491, 7493, 7496	A4, A1
6	I2C bus	General I2C bus error	7200, 3604, 3605	A4
7	Not applicable	-	-	-
8	Not applicable	E/W Protection (Large Screen)	-	-
9	M24C16	NVM I2C identification error	7641, 3641, 3642, 3643	A4
10	Tuner	Tuner I2C identification error	1000, 3003, 3004	A3
11	Not applicable	Black current loop protection	3313, 7307, 7308, 7309, 7310, 7311, 7312, 7313, 7314, 7315, 7316, 7317, 7318, CRT	B1
12	Not applicable	MAP I2C identification error (USA)	-	-
13	Not applicable	VC I2C identification error (Eu)	-	-
14	Not applicable	DVD I2C identification error	-	-

F_15380_001.eps
050405

Testpoint Overview Mono Carrier and CRT Panel

MONO CARRIER TRACK SIDE VIEW

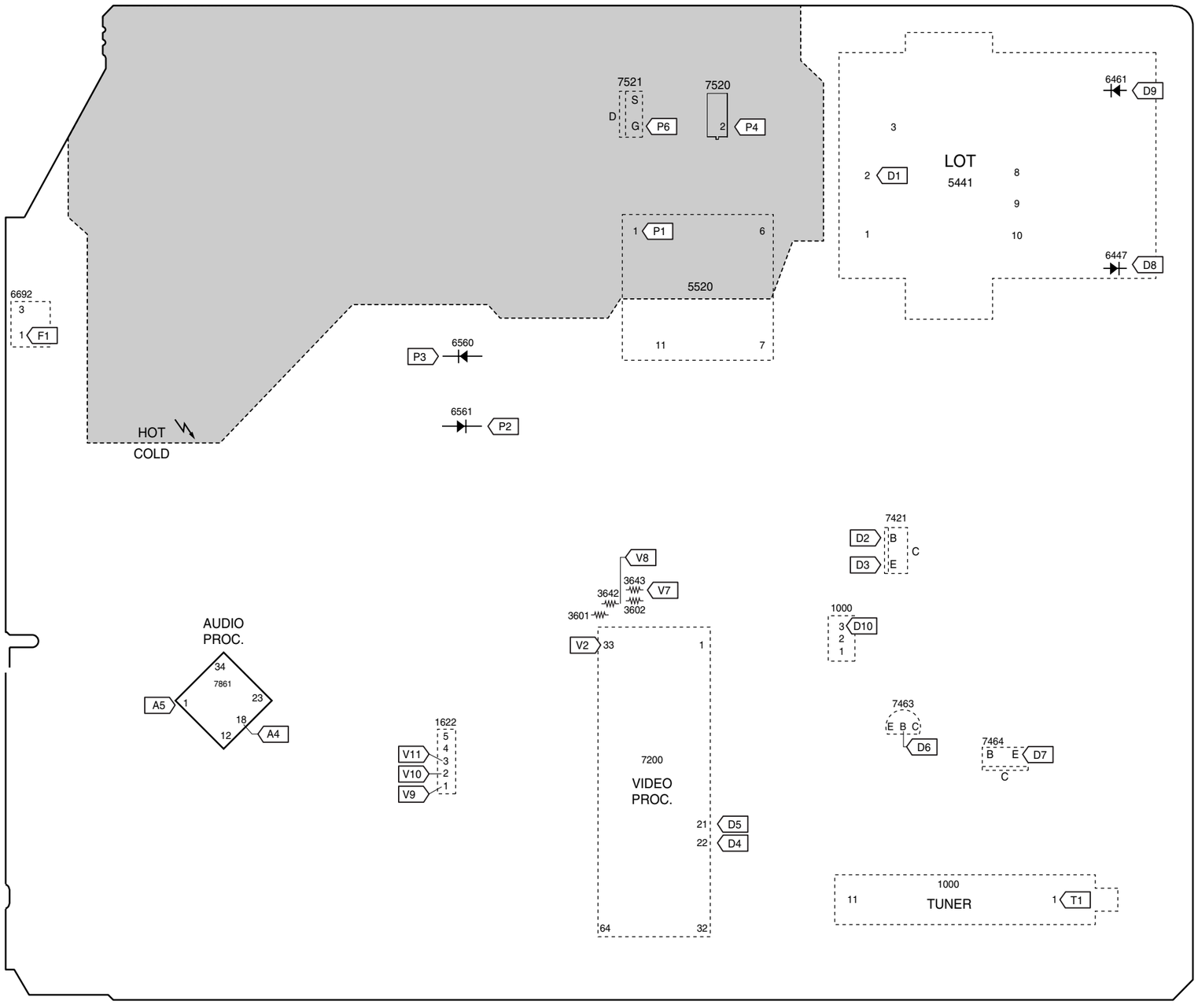

CRT TRACK SIDE VIEW

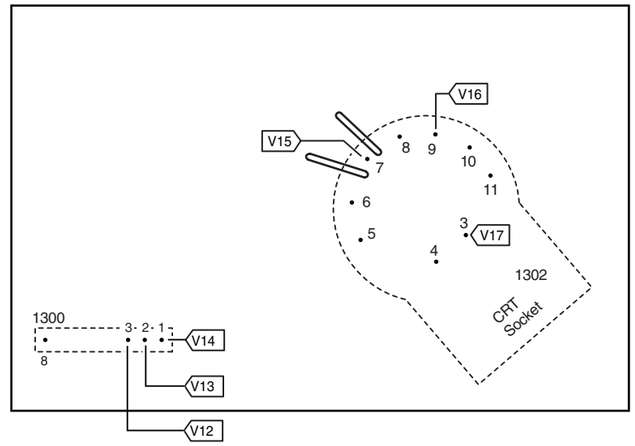

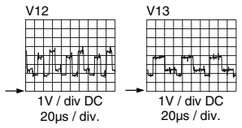

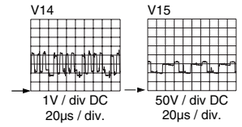

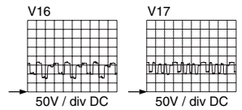

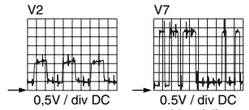

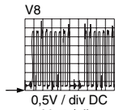

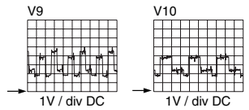

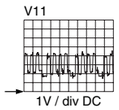

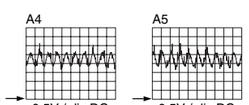

D1 97V DC

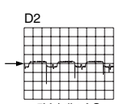

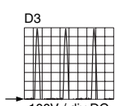

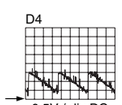

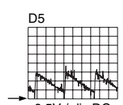

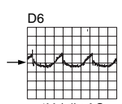

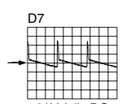

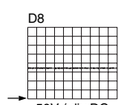

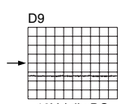

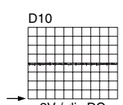

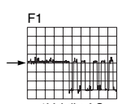

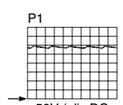

P2 97V DC
P3 13V5 DC
P4 17V8 DC

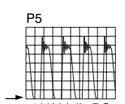

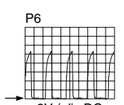

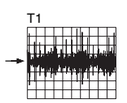

E_14560_019.eps
180304

7. Circuit Diagrams and PWB Layouts

Mono Carrier: Power Supply

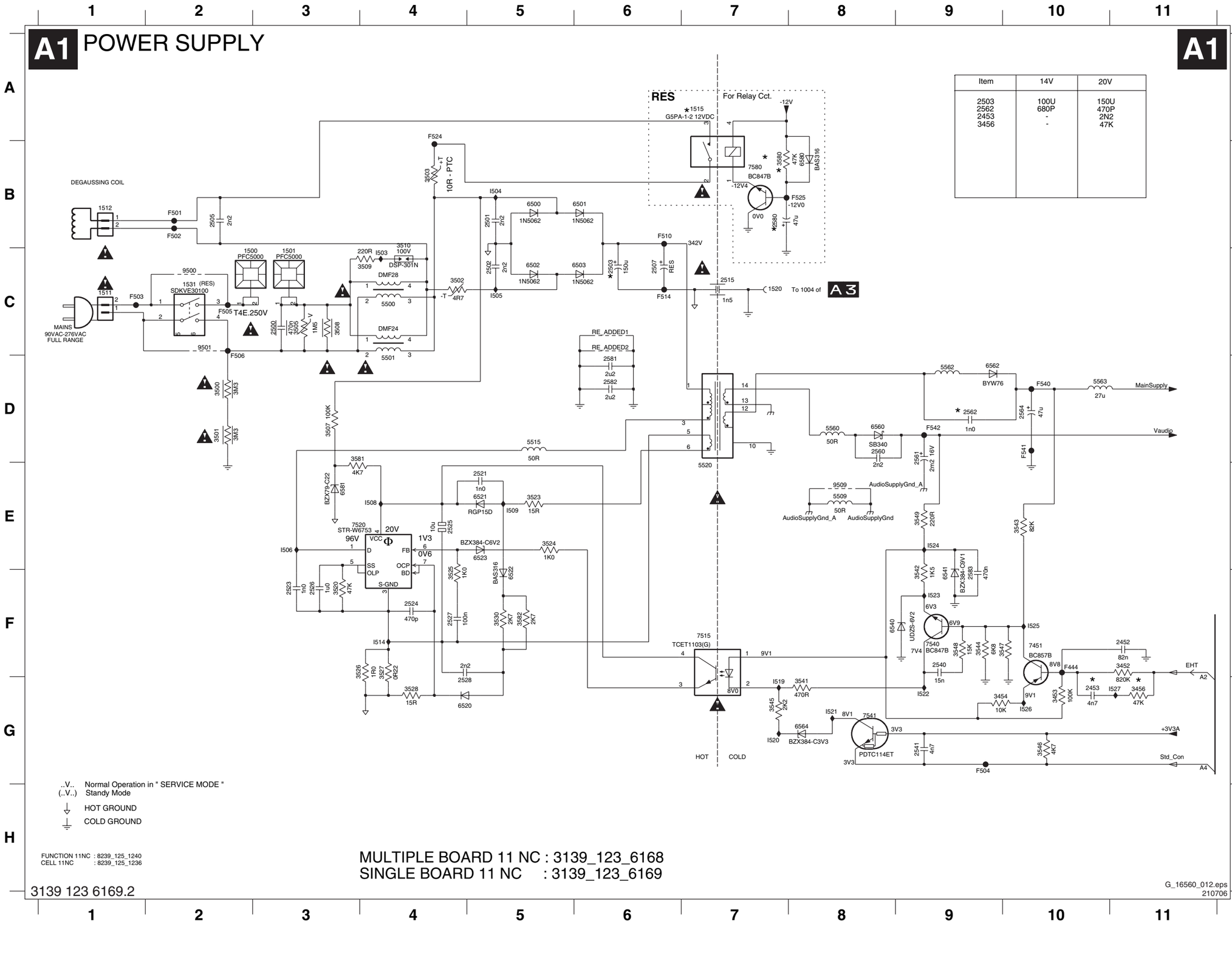

Item	14V	20V
2503	100U	150U
2562	680P	470P
2453	-	2N2
3456	-	47K

1500 C2 9509 E8
1501 C3 F444 F10
1511 C1 F501 B2
1512 B1 F502 B2
1515 A7 F503 C1
1520 C7 F504 G9
1531 C2 F505 C2
2452 F11 F506 D2
2453 G10 F510 B6
2500 C3 F514 C6
2501 B5 F524 A4
2502 C5 F525 B8
2503 C6 F540 D10
2505 B2 F541 D10
2507 C6 F542 D9
2515 C7 I503 C4
2521 E5 I504 B5
2523 F3 I505 C5
2524 F4 I506 E3
2525 E4 I508 E4
2526 F3 I509 E5
2527 F4 I514 F4
2528 G4 I519 G7
2540 F9 I520 G7
2541 G9 I521 G8
2560 D8 I522 G9
2561 D9 I523 F9
2562 D9 I524 E9
2564 D10 I525 F9
2580 B7 I526 G10
2581 D6 I527 G11
2582 D6 RE_ADDED1 C6
2583 F9 RE_ADDED2 C6
3452 F11
3453 G10
3454 G9
3456 G11
3500 D2
3501 D2
3502 C4
3503 B4
3505 C3
3507 D3
3508 C3
3509 C4
3510 B4
3520 F3
3523 E5
3524 E5
3525 F4
3526 F4
3527 F4
3528 G4
3530 F5
3541 G8
3542 F9
3543 E10
3544 F9
3545 G7
3546 G10
3547 F10
3548 F9
3549 E9
3580 B7
3581 D3
3582 F5
5500 C4
5501 D4
5509 E8
5515 D5
5520 E7
5560 D8
5562 D9
5563 D10
6500 B5
6501 B6
6502 C5
6503 C6
6520 G4
6521 E5
6522 F5
6523 E5
6540 F8
6541 F9
6560 D8
6562 D9
6564 G8
6580 B8
6581 E3
7451 F10
7515 F7
7520 E4
7540 F9
7541 G8
7580 B7
9500 C2
9501 C2

Mono Carrier: Deflection

A2 DEFLECTION

Line Deflection

Item	14LPD	20LPD	14SDI	20SDI
3456	-	47K	-	47K
3473	4R7	3R3	4R7	3R3
3474	4R7	3R9	4R7	3R9
2423	12N	15N	12N	15N
2424	820P	820P	330P	-
2441	22N	15N	22N	15N
3403	470R	1K	470R	1K
3404	-	1K	-	1K
3441	47K	56K	47K	56K
3442	150K	100K	150K	100K
3443	3R3	3R3	1R5	0R47
3444	2R2	2R2	1R5	0R47
3447	220K	100K	220K	100K
3451	680R	1K8	680R	1K8
3455	470R	2K2	470R	2K2
3460	100K	47K	100K	47K
6448	-	-	-	EGP20DL

TO PICTURE TUBE B 1
TO CRT PANEL B 1
TO 1300 OF CRT PANEL B 1
TO 1464 OF A2
TO 1465 OF A2

Frame Deflection

MULTIPLE BOARD 11 NC : 3139_123_6168
SINGLE BOARD 11 NC : 3139_123_6169

FUNCTION 11NC : 8239_125_1241
CELL 11NC : 8239_125_1236

1400 E10 6452 D9
1401 C4 6453 D8
1402 G6 6460 F3
1463 E8 6461 F6
1464 E11 6462 E5
1465 E11 6463 E6
2405 D3 6464 F4
2406 D4 7421 B3
2408 D5 7422 B2
2420 B2 7423 C3
2421 B3 7440 C8
2423 A4 7461 F2
2424 A4 7462 F3
2426 B2 7463 G4
2427 B1 7464 E4
2428 D2 7465 G5
2429 B2 7466 F4
2441 C9 9402 E4
2444 E8 9403 C9
2446 E8 F404 D5
2447 E8 F405 C5
2448 E8 F406 C5
2455 D9 F407 C5
2457 E7 F422 D2
2460 E6 F424 B2
2461 F2 F425 B3
2462 F3 F426 B3
2463 F3 F427 B4
2464 F3 F428 B4
2465 F5 F429 C2
2470 F5 F443 C10
2471 B1 F446 D9
2473 C7 F448 D9
3402 D5 F449 E9
3403 D4 F450 E8
3404 D4 F461 G6
3405 D4 F462 G6
3410 C9 F463 D6
3421 C2 F464 D7
3422 A3 I424 C2
3423 C2 I425 A2
3424 B1 I426 B2
3425 C1 I427 B3
3426 B3 I428 C3
3428 B3 I430 C2
3430 C2 I431 D4
3432 C2 I432 F1
3439 D8 I434 G2
3440 D8 I436 G3
3441 C8 I437 E3
3442 D8 I438 E4
3443 D7 I439 F4
3444 D7 I440 F4
3445 D7 I441 E5
3446 E6 I442 F5
3447 C8 I443 F5
3448 E7 I444 E6
3449 C8 I445 C8
3450 C9 I446 C8
3451 C9 I447 C8
3455 C10 I448 C9
3457 C8 I449 C9
3459 D8 I450 C9
3460 D9 I451 C9
3461 F1 I452 D9
3462 G2 I453 E10
3463 F2 I454 E10
3464 G3 I455 E10
3465 G2 I456 E10
3466 G3
3468 F4
3470 F4
3471 F5
3472 G5
3473 H5
3474 H5
3475 F6
3476 F6
3478 G5
4401 D4
5401 E5
5402 E4
5421 C3
5441 B5
6421 D4
6422 A4
6423 C1
6424 F2
6425 F3
6426 B2
6444 D7
6445 C7
6446 D7
6447 D7
6448 D7
6451 C9

G_16560_013.eps
210706

Mono Carrier: Tuner IF

A3 TUNER IF

A3

1000 C4
1001 C7
1003 C2
1004 D5
2001 C2
2002 C3
2003 D4
2004 D4
2005 C6
2006 C2
2007 C6
3001 B3
3002 C3
3003 C3
3004 C3
3005 B2
5001 C6
5002 B5
5003 B5
6001 C6
9003 B5
F001 B2
F003 C6
F004 C6
F005 B6
F006 B5
I001 D5

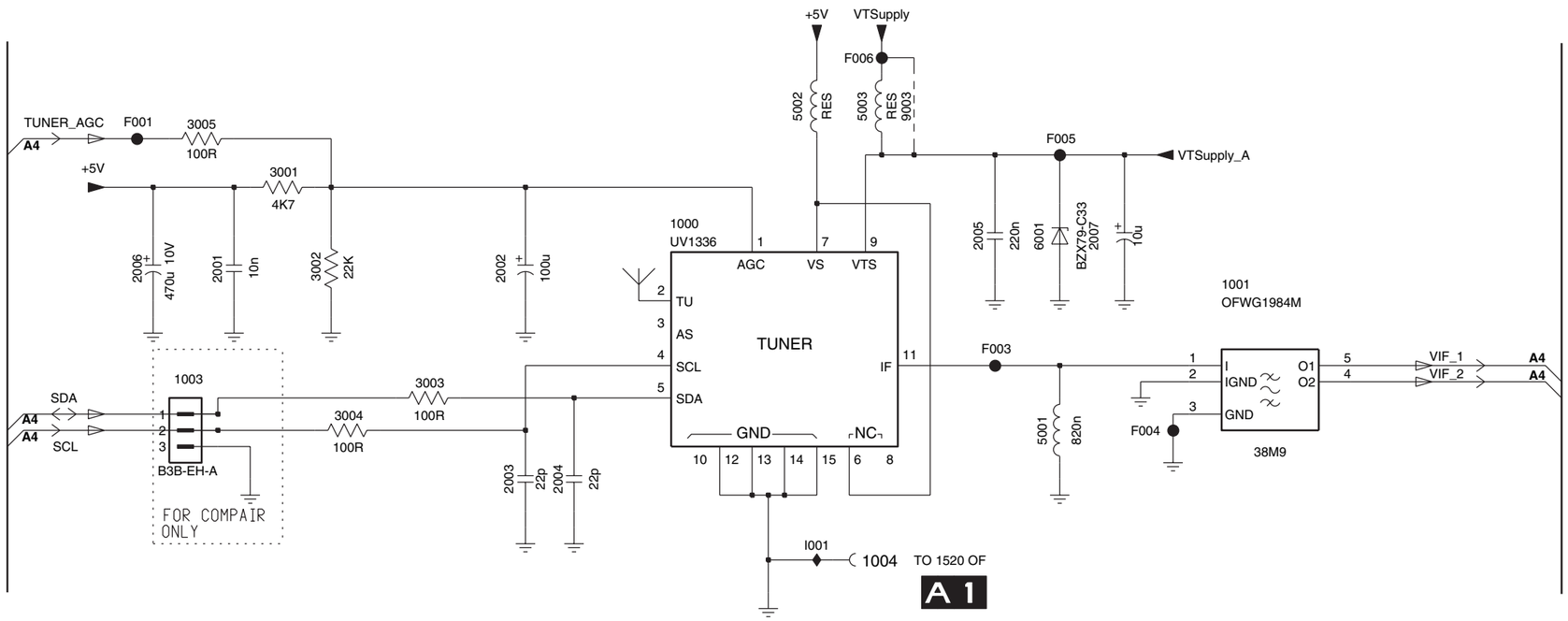

FUNCTION 11NC : 8239_125_0987
CELL 11NC : 8239_125_0980

MULTIPLE BOARD 11 NC : 3139_123_6168
SINGLE CHASSIS 11 NC : 3139_123_6169

G_16560_014.eps
210706

Mono Carrier: Video Processing

A4 VIDEO PROCESSING

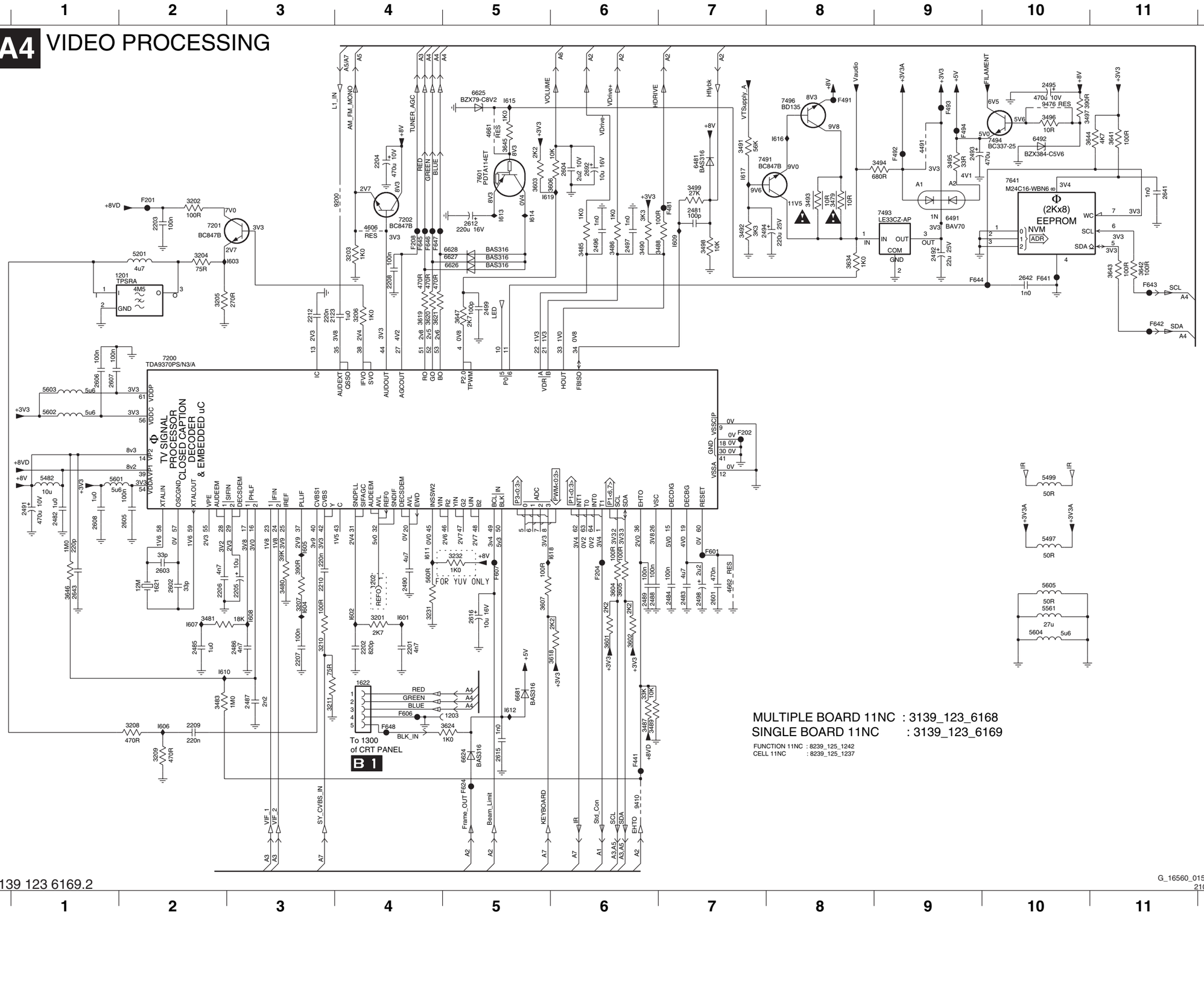

1201 C1	3641 B11
1202 F4	3642 C11
1203 G5	3643 C11
1621 F2	3644 B11
1622 G4	3645 B5
2123 C3	3646 F1
2201 F4	3647 C5
2202 F4	4491 B9
2203 B2	4606 B4
2204 B4	4661 A5
2205 F3	4662 F7
2206 F2	5201 C2
2207 F3	5482 E1
2208 C4	5497 E10
2209 G2	5499 E10
2210 F3	5561 F10
2212 C3	5601 E1
2481 B7	5602 D1
2482 E1	5603 D1
2483 F7	5604 F10
2484 F7	5605 F10
2485 F2	6481 B7
2486 F3	6491 B9
2487 G3	6492 B10
2488 F6	6624 G5
2489 F6	6625 A5
2490 F4	6626 C5
2491 E1	6627 C5
2492 C9	6628 C5
2493 B9	6681 G5
2494 B7	7200 D2
2495 A10	7201 B2
2496 C6	7202 B4
2497 C6	7491 B7
2498 F7	7493 B9
2499 C5	7494 B10
2601 F7	7496 A8
2602 F2	7601 B5
2603 F2	7641 B10
2604 B6	9200 B4
2605 E2	9410 H6
2606 D1	9476 A10
2607 D1	F201 B2
2608 E1	F202 D7
2612 B5	F204 F6
2615 G5	F208 C4
2616 F5	F441 G6
2641 B11	F481 B7
2642 C10	F491 A8
2643 F1	F492 B9
2692 B6	F493 A9
3201 F4	F494 A9
3202 B2	F601 E7
3203 C4	F606 G4
3204 C2	F607 F5
3205 C2	F624 H5
3206 C4	F641 C10
3207 F3	F642 C11
3208 G2	F643 C11
3209 G2	F644 C9
3210 F3	F645 C4
3211 G3	F646 C4
3231 F4	F647 C4
3232 E5	F648 G4
3479 B8	I601 F4
3480 F3	I602 F4
3481 F2	I603 C3
3483 G2	I604 F3
3485 C6	I605 E3
3486 C6	I606 G2
3487 G6	I607 F2
3488 C6	I608 F3
3489 G6	I609 B7
3490 C6	I610 F2
3491 B7	I611 E4
3492 B7	I612 G5
3493 B8	I613 B5
3494 B9	I614 B5
3495 B9	I615 A5
3496 A10	I616 B8
3497 A10	I617 B7
3498 C7	I618 E6
3499 B7	I619 B5
3601 F6	
3602 F6	
3603 B5	
3604 F6	
3605 F6	
3606 B6	
3607 F5	
3618 F6	
3619 C4	
3620 C4	
3621 C4	
3624 G5	
3634 C8	

G_16560_015.eps
210706

Mono Carrier: Audio - BTSC Stereo Decoder

A5 AUDIO - BTSC STEREO DECODER (ECONOMIC)

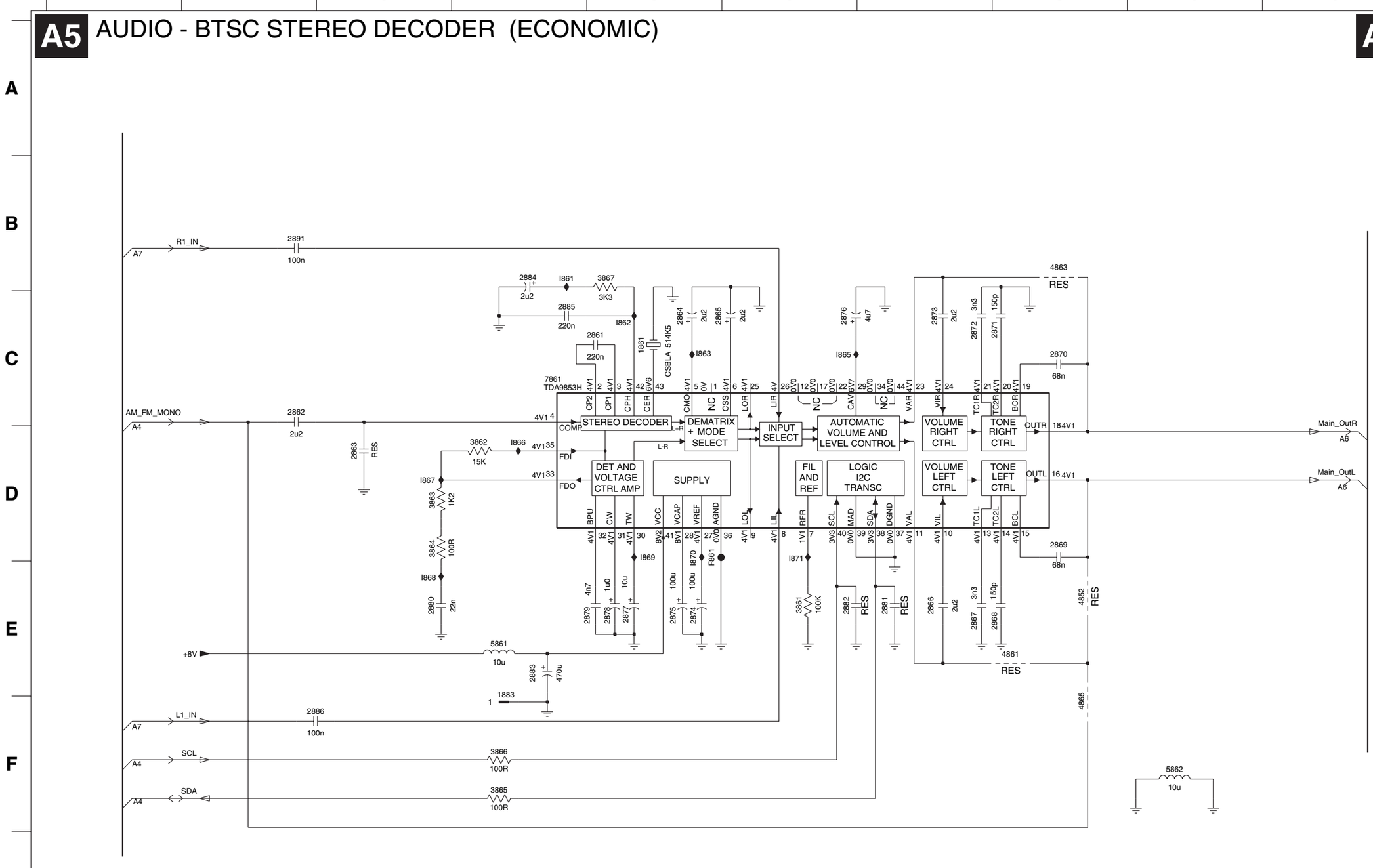

FUNCTION 11NC : 8239_125_1245
CELL 11NC : 8239_125_1238

MULTIPLE BOARD 11NC : 3139_123_6168
SINGLE CHASSIS 11NC : 3139_123_6169

3139 123 6169.2

G_16560_016.eps
210706

1861 C5
1883 F4
2861 C5
2862 C2
2863 D3
2864 C5
2865 C5
2866 E7
2867 E7
2868 E8
2869 D8
2870 C8
2871 C8
2872 C7
2873 C7
2874 E5
2875 E5
2876 C6
2877 E5
2878 E5
2879 E5
2880 E3
2881 E7
2882 E6
2883 E4
2884 B4
2885 C4
2886 F2
2891 B2
3861 E6
3862 D4
3863 D3
3864 D3
3865 F4
3866 F4
3867 B5
4852 E8
4861 E8
4863 B8
4865 F8
5861 E4
5862 F9
7861 C4
F861 D5
I861 B4
I862 C5
I863 C5
I865 C6
I866 D4
I867 D3
I868 E3
I869 D5
I870 D5
I871 D6

Mono Carrier: Audio Amplifier + Mono Sound Processing

A6 AUDIO AMPLIFIER + MONO SOUND PROCESSING

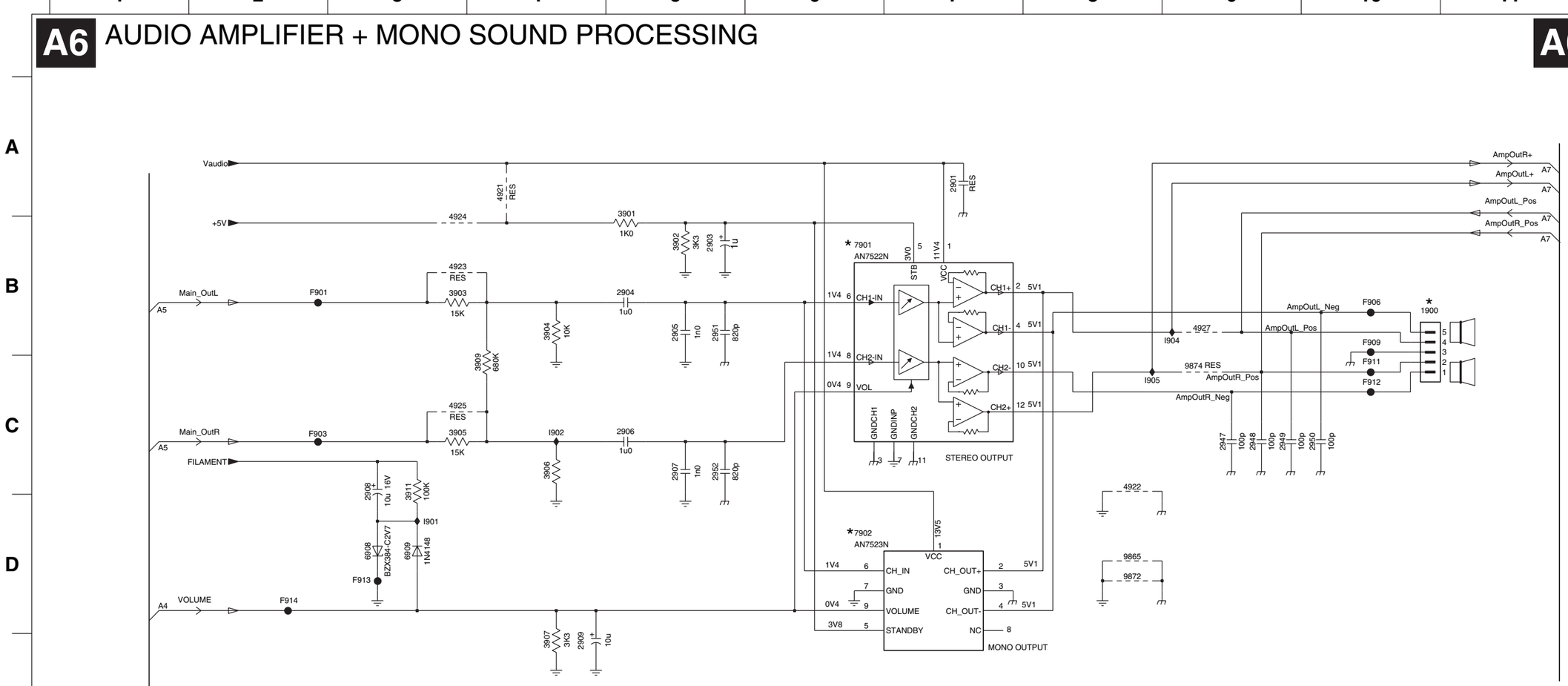

Item	Mono	Stereo
7901	-	AN7522
7902	AN7523	-
1900	3 PIN	5 PIN

MULTIPLE BOARD 11NC : 3139_123_6168
SINGLE CHASSIS 11NC : 3139_123_6169

FUNCTION 11NC : 8239_125_1244
CELL 11NC : 8239_125_1238

1900 B10
2901 A7
2903 B5
2904 B5
2905 B5
2906 C5
2907 C5
2908 C3
2909 E4
2947 C9
2948 C9
2949 C9
2950 C10
2951 B5
2952 C5
3901 B5
3902 B5
3903 B3
3904 B4
3905 C3
3906 C4
3907 E4
3909 C4
3911 C3
4921 A4
4922 C8
4923 B3
4924 B3
4925 C3
4927 B9
6908 D3
6909 D3
7901 B6
7902 D6
9865 D8
9872 D8
9874 C9
F901 B2
F903 C2
F906 B10
F909 B10
F911 C10
F912 C10
F913 D3
F914 D2
I901 D3
I902 C4
I904 B9
I905 C8

G_16560_017.eps
210706

Mono Carrier: Front I/O + Front Control + Headphone

A7 FRONT IO + FRONT CONTROL + HEADPHONE

A7

FRONT CINCH

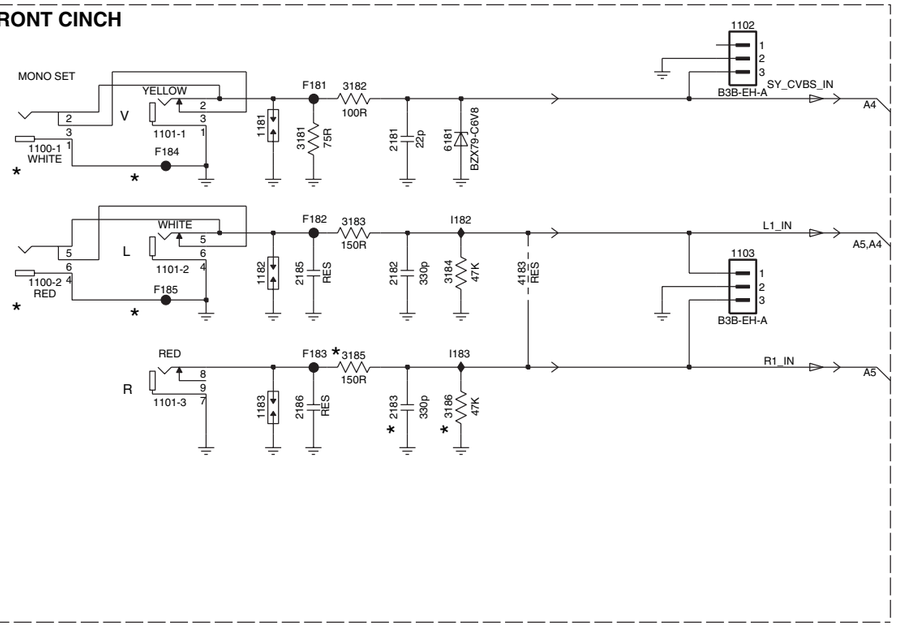

HEADPHONE

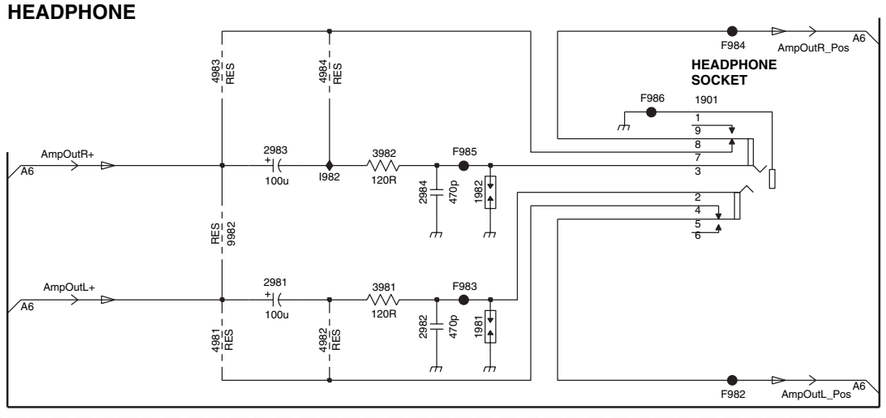

FRONT CONTROL

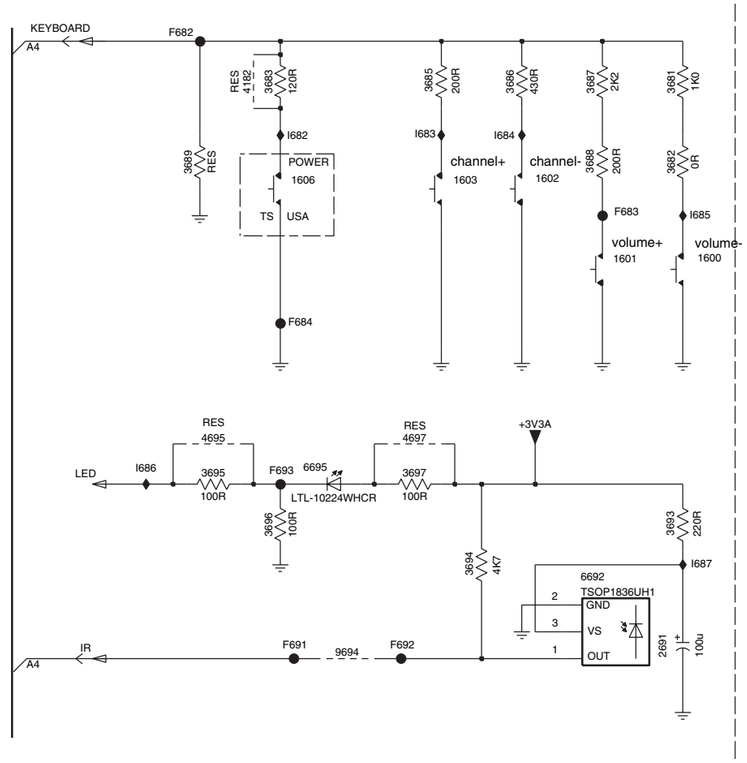

For Engg purposes only

F987 — 4694 — F988

Item	Stereo	Mono

MULTIPLE BOARD 11 NC : 3139_123_6168
SINGLE BOARD 11 NC : 3139_123_6169

FUNCTION 11NC : 8239_125_1246
CELL 11NC : 8239_125_1239

3139 123 6169.2

G_16560_018.eps
210706

1100-1 B1
1100-2 C1
1101-1 B2
1101-2 C2
1101-3 D2
1102 B5
1103 C5
1181 B2
1182 C2
1183 D2
1600 C9
1601 C9
1602 C9
1603 C8
1606 C7
1901 E5
1981 G3
1982 F3
2181 B3
2182 C3
2183 D3
2185 C2
2186 D2
2691 E9
2981 F2
2982 G3
2983 F2
2984 F3
3181 B2
3182 B3
3183 C3
3184 C3
3185 C3
3186 D3
3681 B9
3682 C9
3683 B7
3685 B8
3686 B9
3687 B9
3688 B9
3689 C7
3693 D9
3694 E8
3695 D7
3696 D7
3697 D8
3981 F3
3982 F3
4182 B7
4183 C4
4694 F7
4695 D7
4697 D8
4981 G2
4982 G2
4983 E2
4984 E2
6181 B3
6692 E9
6695 D8
9694 E8
9982 F2
F181 B3
F182 C3
F183 C3
F184 B2
F185 C2
F682 B7
F683 C9
F684 C7
F691 E7
F692 E8
F693 D7
F982 G5
F983 F3
F984 E5
F985 F3
F986 E4
F987 F7
F988 F7
I182 C3
I183 C3
I682 B7
I683 B8
I684 B8
I685 C9
I686 D7
I687 E9
I982 F3

Layout Mono Carrier (Top Side)

1000 D4 1001 C4 1003 D4 1004 C4 1100 A4 1101 A4 1102 A3 1103 A3
1201 B4 1202 C4 1203 A3 1400 C3 1401 A3 1402 D3 1463 D3 1464 C3
1465 B2 1500 A1 1501 A1 1511 A1 1512 B2 1515 A2 1520 B2 1531 A1
1600 A3 1601 A3 1602 A2 1603 B3 1606 A1 1621 B3 1622 B3 1861 A3
1883 A3 1900 A4 1901 A4 2002 D4 2006 D4 2007 D4 2204 C4 2205 C4
2405 C2 2406 D2 2408 D2 2423 D3 2424 C2 2428 D3 2441 D2 2444 D2
2446 D3 2447 D2 2448 C3 2455 C3 2457 D2 2460 C1 2463 D3 2465 D3
2470 D4 2488 C4 2491 A4 2492 A3 2494 B3 2495 A4 2498 C4 2500 A1
2501 A1 2502 B3 2503 B2 2505 B2 2507 B1 2515 B2 2523 B1 2525 B1
2560 B2 2561 B2 2562 B2 2564 C2 2580 A2 2612 A3 2616 B4 2691 A2
2870 A4 2874 A3 2875 A4 2876 A3 2877 A3 2878 A3 2883 A3 2884 A3
2885 A3 2903 A4 2908 A4 2909 A4 2981 A4 2982 A4 2983 A4 3003 D4
3005 C4 3006 C4 3181 A4 3182 A4 3183 A4 3185 A4 3204 B4 3205 B4
3208 B4 3210 B4 3403 D2 3404 D2 3421 D4 3422 C2 3423 D3 3424 D3
3425 B2 3426 C2 3428 D3 3439 C2 3442 C3 3443 D3 3444 D3 3445 D2
3446 B2 3448 D2 3449 C3 3459 C3 3464 D3 3468 D3 3470 D3 3471 D3
3472 D3 3473 D3 3474 D3 3475 C3 3478 D4 3479 B3 3485 C4 3486 C4
3488 B4 3491 C4 3493 A3 3494 A3 3495 A4 3496 B4 3497 A4 3498 B4
3501 A2 3502 A1 3503 A2 3505 A1 3507 B1 3508 A1 3509 A2 3510 A2
3523 C1 3524 C1 3526 B1 3527 B1 3528 B1 3543 B2 3549 A3 3581 B1
3604 B3 3605 B3 3618 B3 3619 B4 3620 B4 3621 B4 3624 B4 3634 A3
3693 A2 3865 A3 3866 A3 3901 A4 3982 A4 4764 B3 5001 D4 5002 D4
5003 D4 5201 A4 5401 D2 5402 D2 5421 D3 5441 D1 5482 B4 5497 A2
5499 A2 5500 A2 5501 A2 5509 B2 5515 B1 5520 C2 5560 B2 5561 B2
5562 B2 5563 C2 5601 B3 5602 B3 5603 B3 5604 B2 5605 B3 5862 A3
6001 D4 6181 A4 6446 D1 6447 D1 6448 D1 6453 C3 6461 C1 6462 D1
6463 D1 6500 A1 6501 A1 6502 A1 6503 A1 6521 C1 6560 B2 6581 B1
6582 B2 6625 A3 6692 A2 6694 A2 6695 A3 7200 B4 7421 C3 7440 C3
7463 C3 7464 D3 7465 B2 7493 A3 7494 A4 7496 B3 7515 C1 7520 B1
7641 B3 7901 A4 7902 A4 9001 D4 9002 C4 9003 C4 9005 C4 9200 B4
9203 A4 9402 D2 9403 C3 9404 D3 9405 C2 9406 C2 9407 C3 9408 C3
9410 C3 9411 C3 9412 C3 9421 D2 9422 C2 9424 D2 9441 C2 9444 D2
9445 C3 9446 D3 9448 C3 9449 C3 9452 C3 9463 C3 9464 C3 9465 A3
9471 D3 9473 D3 9475 C3 9476 B4 9478 D4 9479 D4 9481 B4 9490 A3
9494 A3 9495 A4 9496 A4 9497 A3 9498 A3 9499 A3 9500 A1 9501 A1
9509 B2 9522 C2 9523 B1 9539 C3 9560 B2 9561 A2 9562 B2 9564 B2
9569 A2 9582 C2 9604 B3 9605 B3 9606 B3 9607 A4 9608 B2 9612 A3
9617 B3 9618 B3 9624 B3 9625 B3 9629 B2 9641 B3 9642 B3 9643 B3
9663 B3 9665 B3 9681 B4 9682 A3 9693 A2 9694 A2 9695 A3 9862 A3
9865 A4 9872 A3 9874 A4 9875 A3 9883 A3 9901 A4 9902 A4 9903 A4
9904 A4 9905 A4 9906 A3 9907 A3 9982 A4 9983 A3

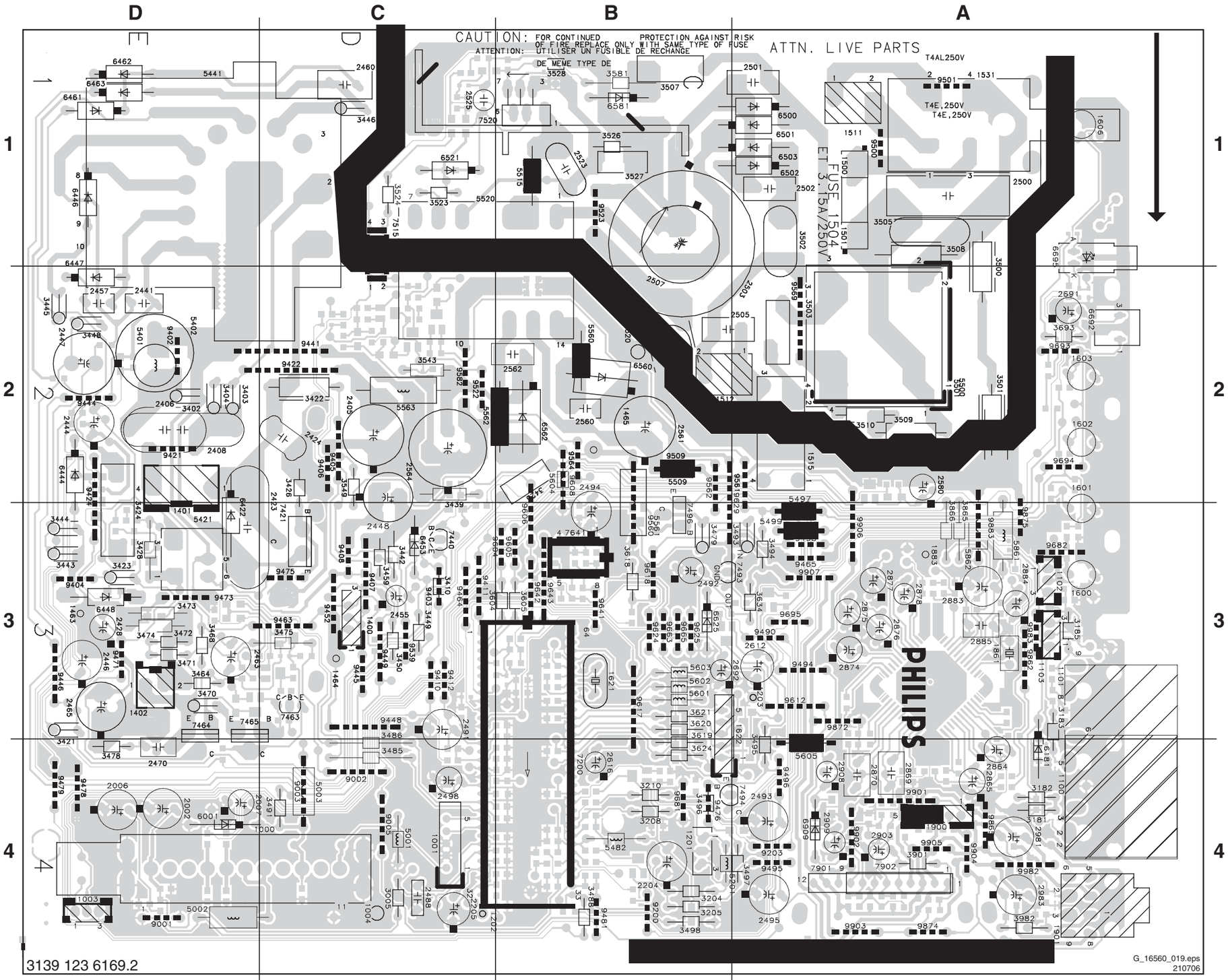

Layout Mono Carrier (Bottom Side)

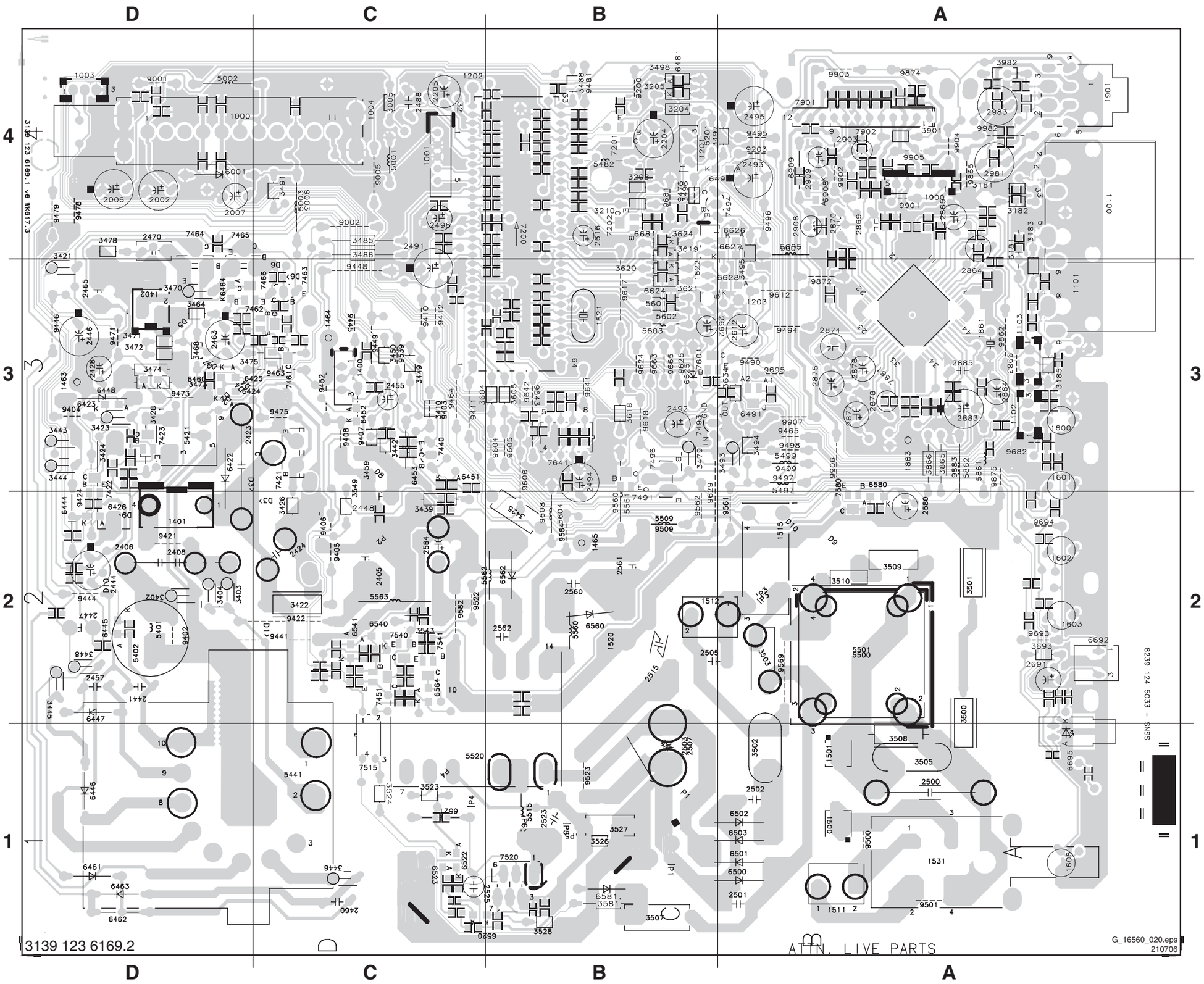

CRT Panel

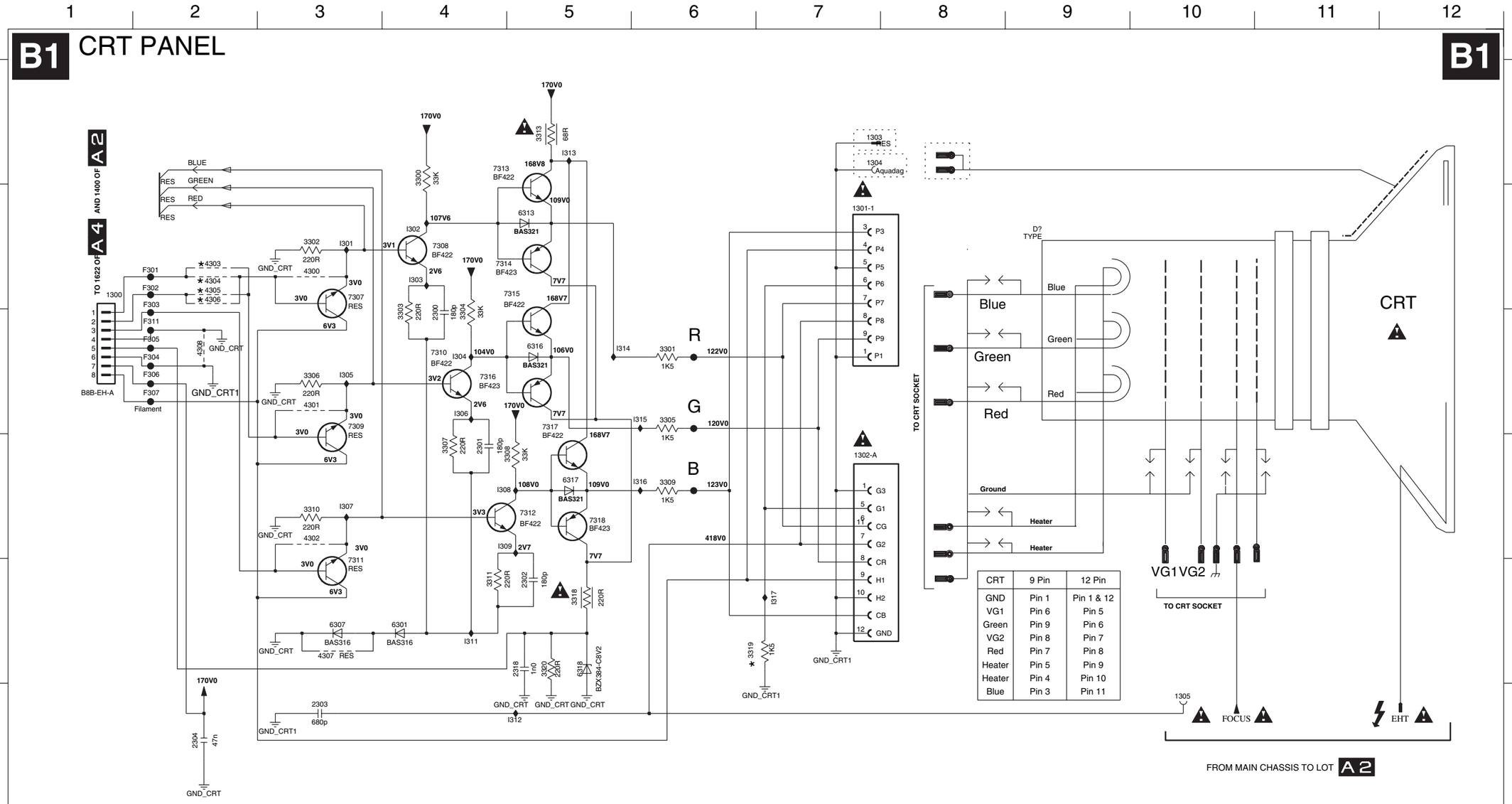

CRT	9 Pin	12 Pin
GND	Pin 1	Pin 1 & 12
VG1	Pin 6	Pin 5
Green	Pin 9	Pin 6
VG2	Pin 8	Pin 7
Red	Pin 7	Pin 8
Heater	Pin 5	Pin 9
Heater	Pin 4	Pin 10
Blue	Pin 3	Pin 11

Item	14V	20v
3319	JUMP	JUMP
4303	NO	JUMP
4304	JUMP	NO
4305	JUMP	NO
4306	NO	JUMP

L06SP CRT MULTIPLE BOARD 11NC : 3139_123_6172
L06SP CRT SINGLE BOARD 11NC : 3139_123_6173

D? B9
1300 B1
1301-1 B7
1302-A D7
1303 A7
1304 A8
1305 F10
2300 C4
2301 D4
2302 E5
2303 F3
2304 F2
2318 E5
3300 A4
3301 C6
3302 B3
3303 C4
3304 C4
3305 C6
3306 C3
3307 D4
3308 D5
3309 D6
3310 D3
3311 E4
3313 A5
3318 E5
3319 E6
3320 E5
4300 B3
4301 C3
4302 D3
4303 B2
4304 B2
4305 B2
4306 B2
4307 E3
4308 C2
6301 E4
6307 E3
6313 B5
6316 C5
6317 D5
6318 E5
7307 B3
7308 B4
7309 C3
7310 C4
7311 D3
7312 D5
7313 A4
7314 B4
7315 B4
7316 C4
7317 C5
7318 D5
F301 B2
F302 B2
F303 B2
F304 C2
F305 C2
F306 C2
F307 C2
F311 C2
I301 B3
I302 B4
I303 B4
I304 C4
I305 C3
I306 C4
I307 D3
I308 D4
I309 D4
I311 E4
I312 F5
I313 A5
I314 C5
I315 C6
I316 D6
I317 E7

3139 123 6173.1

G_16560_021.eps
210706

Layout CRT Panel (Top Side)

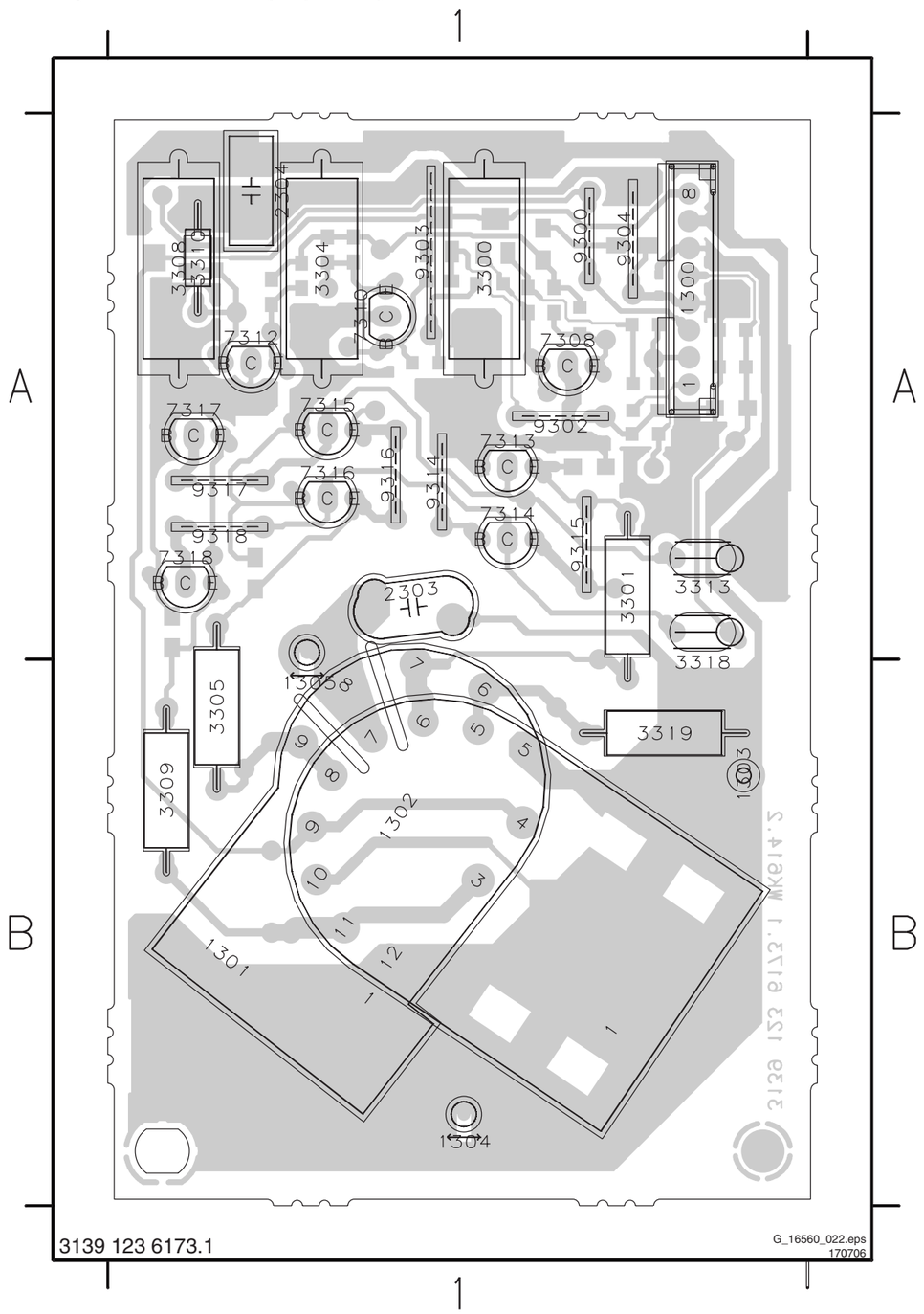

1300 A1
1301 B1
1302 B1
1303 B1
1304 B1
1305 B1
2303 A1
2304 A1
3300 A1
3301 A1
3304 A1
3305 B1
3308 A1
3309 B1
3310 A1
3313 A1
3318 B1
3319 B1
7308 A1
7310 A1
7312 A1
7313 A1
7314 A1
7315 A1
7316 A1
7317 A1
7318 A1
9300 A1
9302 A1
9303 A1
9304 A1
9314 A1
9315 A1
9316 A1
9317 A1
9318 A1

Layout CRT Panel (Bottom Side)

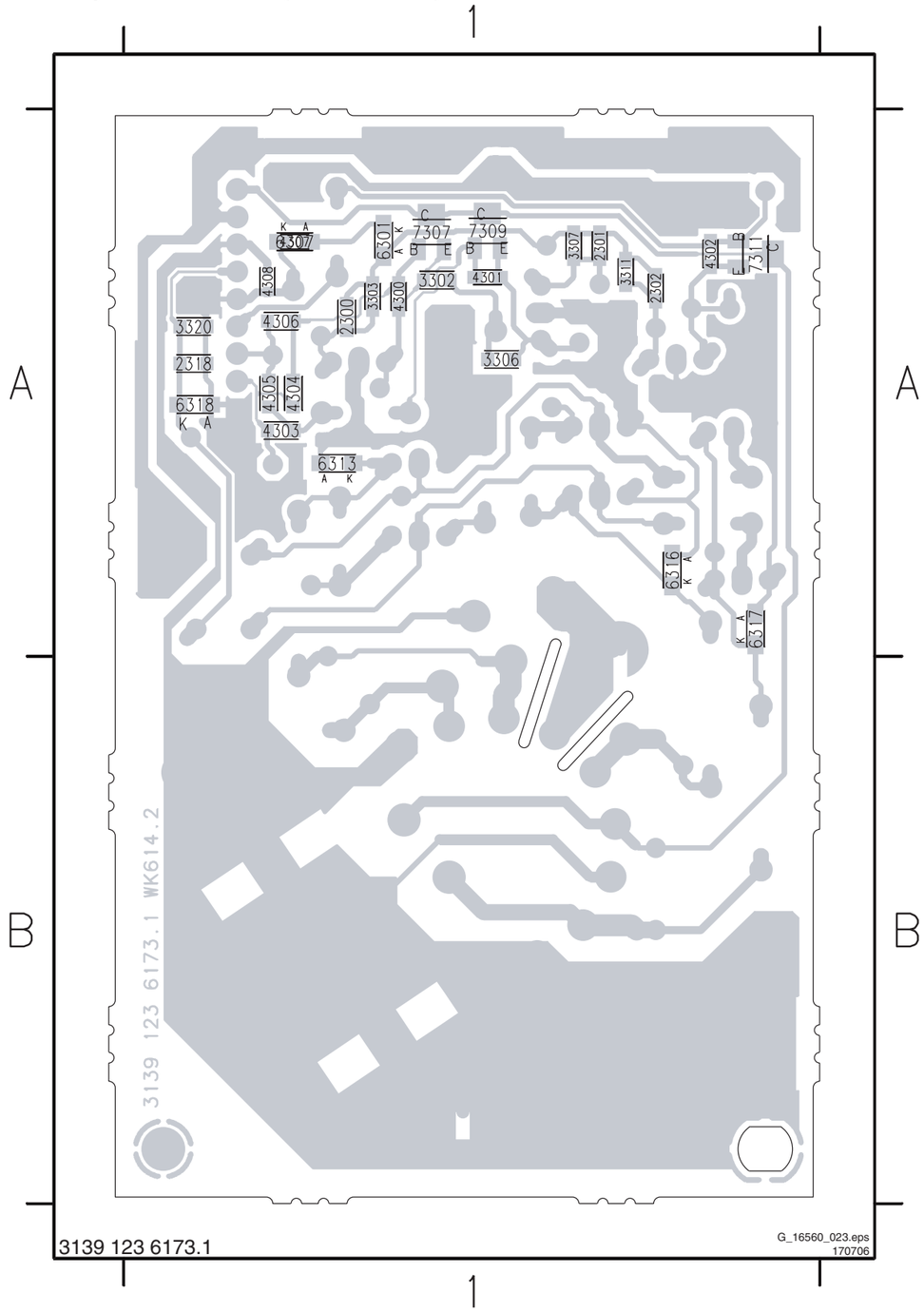

2300 A1
2301 A1
2302 A1
2318 A1
3302 A1
3303 A1
3306 A1
3307 A1
3311 A1
3320 A1
4300 A1
4301 A1
4302 A1
4303 A1
4304 A1
4305 A1
4306 A1
4307 A1
4308 A1
6301 A1
6307 A1
6313 A1
6316 A1
6317 A1
6318 A1
7307 A1
7309 A1
7311 A1

8. Alignments

Index of this chapter:

8.1 General Alignment Conditions
8.2 Hardware Alignments
8.3 Software Alignments and Settings

Note: The Service Default Alignment Mode (SDAM) is described in the "Service Modes, Error Codes and Fault Finding" section. SDAM menu navigation is performed by using the MENU UP, MENU DOWN, MENU LEFT, and MENU RIGHT keys of the remote control transmitter.

8.1 General Alignment Conditions

Perform all electrical adjustments under the following conditions:

- AC voltage and frequency: according to country's standard.
- Connect the television set to the AC power via an isolation transformer.
- Allow the television set to warm up for approximately 20 minutes.
- Measure the voltages and waveforms in relation to chassis ground (with the exception of the voltages on the primary side of the power supply). Never use heatsinks as ground.
- Test probe: Ri > 10 M ohm; Ci < 2.5 pF.
- Use an isolated trimmer/screwdriver to perform the alignments.

8.2 Hardware Alignments

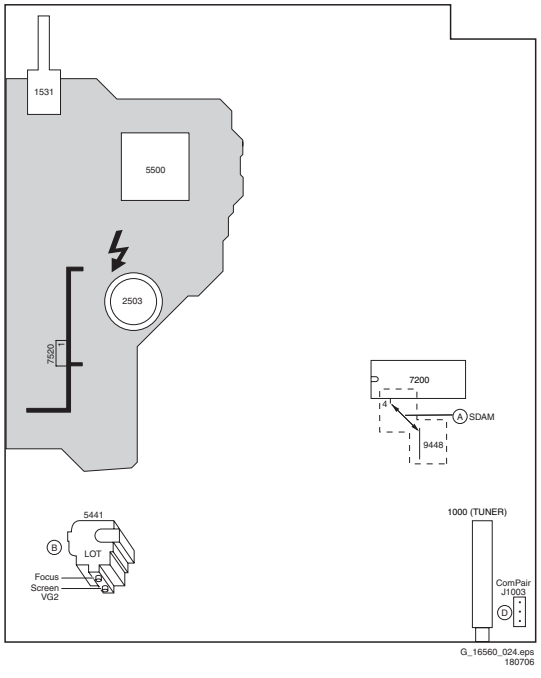

Figure 8-1 Top view mono carrier

8.2.1 Vg2 Adjustment

1. Activate SDAM by pressing the following key sequence on the remote control transmitter: **0 6 2 5 9 6** directly followed by the MENU button (do not allow the display to time out between entries while keying the sequence).
2. Use the MENU UP/DOWN keys to highlight the WHITE TONE sub menu.
3. Press the MENU LEFT/RIGHT key to enter the WHITE TONE sub menu.
4. In the WHITE TONE sub menu, press the MENU UP/DOWN keys to select NORMAL RED, NORMAL GREEN, or NORMAL BLUE.
5. Use the MENU LEFT/RIGHT keys to set the values of NORMAL RED, NORMAL GREEN and NORMAL BLUE to '40'.
6. Press the MENU button twice to enter the normal user menu.
7. In the normal user menu, use the MENU UP/DOWN keys to highlight the PICTURE sub menu (if necessary).
8. Press the MENU LEFT/RIGHT keys to enter the PICTURE sub menu.
9. Use the MENU UP/DOWN keys to select CONTRAST. Be sure to record the current value of CONTRAST.
10. Use the MENU LEFT/RIGHT keys to set the value of CONTRAST to '0'.
11. Use the MENU UP/DOWN keys to select BRIGHTNESS. Be sure to record the current value of BRIGHTNESS.
12. Use the MENU LEFT/RIGHT keys to set the value of BRIGHTNESS to minimum (OSD just visible in a dark room).
13. Press the MENU button twice to return to the top level SDAM menu.
14. Press the OSD/STATUS button to hide the SDAM on-screen display ("S" indication remains visible). This, to avoid interferences during the waveform measurements
15. Connect the RF output of a video pattern generator to the antenna input, and input a 'black picture' test pattern to the television set.
16. Set the oscilloscope to 50 V/div and the time base to 0.2 milliseconds (external triggering on the positive vertical pulse with a 10:1 probe).
17. Ground the scope at the CRT panel and connect a 100:1 probe to one of the cathodes of the picture tube socket (pin 7= Red, pin 9= Green, and pin 3= Blue, see also schematic diagram B1). Measure the level of the black current measuring pulses. These are the second line (Red), third line (Green), and fourth line (Blue) directly after the frame blanking (see figure "$V_{cut-off}$"). Remark: This chassis is using a TDA93XX UOC series. These use two different measuring pulses at each of the R, G, and B outputs. The above-mentioned level applies to the pulse with the lowest level of each gun.
18. Select the cathode with the highest V_{DC} value for the alignment. Adjust the $V_{cut-off}$ of this gun with the SCREEN potentiometer (see figure "Top view family board") on the LOT to the correct value (see table "Vg2 alignment values").
19. Press the OSD/STATUS button to display the SDAM on-screen display.
20. Press the MENU button to enter the normal user menu.
21. In the normal user menu, use the MENU UP/DOWN keys to highlight the PICTURE sub menu (if necessary).
22. Press the MENU LEFT/RIGHT keys to enter the PICTURE sub menu.
23. Use the MENU UP/DOWN keys to select CONTRAST.
24. Use the MENU LEFT/RIGHT keys to reset the value of CONTRAST to the original value.
25. Use the MENU UP/DOWN keys to select BRIGHTNESS.
26. Use the MENU LEFT/RIGHT keys to reset the value of BRIGHTNESS to the original value.
27. Press the MENU button twice to return to the top level SDAM menu.
28. Use the POWER button on the remote control transmitter or the POWER button on the television set to turn off the television set. This will save the changes made in SDAM.

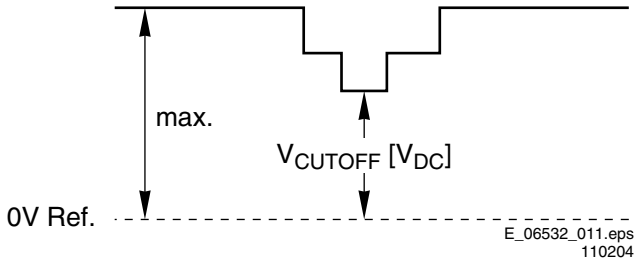

Figure 8-2 V_cutoff

Table 8-1 Vg2 alignment values

Screen Size	Cut-off point (V)
14	+135 V ± 4 V
20	+140 V ± 4 V

8.2.2 Focus Adjustment

1. Connect the RF output of a video pattern generator to the antenna input.
2. Input a circle or crosshatch test pattern to the television set.
3. Set the BRIGHTNESS level to 100 before adjustment.
4. Press the SMART PICTURE button on the remote control transmitter repeatedly to choose NATURAL (or MOVIES) picture mode.
5. Adjust the FOCUS potentiometer (see figure "Top view family board") until the vertical lines near the left and right sides of the screen, and near the horizontal centre of the screen, are at minimum width without visible haze.

8.3 Software Alignments and Settings

The following options are performed in the Service Default Alignment Mode (SDAM). SDAM is described in the "Service Modes, Error Codes and Fault Finding" section.
The following alignments are explained:
1. OPTIONS
2. TUNER
3. WHITE TONE
4. GEOMETRY

8.3.1 OPTIONS

Options are used to control the presence or absence of certain features and hardware.

Note: Each option byte controls several features of the television set; therefore, before changing option byte information, it is important to record the current option byte values. This ensures that the television features can be restored to the original settings, if necessary.

How to Change an Option Byte
An Option Byte represents a number of different options. Changing these bytes directly makes it possible to set all options very fast. All options are controlled via seven option bytes. Select the option byte (OP 1.. OP 7) with the MENU UP/DOWN keys, and enter the new value.

1. Activate SDAM by pressing the following key sequence on the remote control transmitter: **0 6 2 5 9 6** directly followed by the MENU button (do not allow the display to time out between entries while keying the sequence).
2. Use the MENU UP/DOWN keys to highlight the OPTIONS sub menu.
3. Press the MENU LEFT or MENU RIGHT key to enter the OPTIONS sub menu.
4. In the OPTIONS sub menu, press the MENU UP/DOWN keys to select 'OP 1' through 'OP 7'.
5. Use the number keys on the remote control transmitter to enter a new value for the selected option byte. The value must be entered as a three-digit value (for example, '4' would be entered as '0 0 4').
6. The selected value must be between '0' and '255'.
7. When all desired changes to the option bytes are made, press the MENU button to return to the top level SDAM menu. This will save changes to the option byte settings.
8. To ensure the option byte changes take effect:
   – Turn the television set 'off' by using the 'POWER' button on the remote control transmitter or the local keyboard.
   – Disconnect the television set from AC power for at least ten seconds.
   – Reconnect the television set to AC power.
   – Turn the television set 'on' by using the 'POWER' button on the remote control transmitter or the local keyboard.

Leaving the OPTION submenu saves the changes in the Option Byte settings. Some changes will only take effect after the set has been switched OFF and ON with the mains switch (cold start).

How to Calculate the Value of an Option Byte
Calculate an Option Byte value (OP 1 .. OP 7) in the following way:
1. Check the status of the single option bits (OB): are they enabled (1) or disabled (0).
2. When an option bit is enabled (1), it represents a certain value (see first column "value between brackets" in table below). When an option bit is disabled, its value is 0.
3. The total value of an Option Byte is formed by the sum of its eight option bits. See second table below for the correct Option Bytes per type number.

Bit (value)	OP1	OP2	OP3	OP4	OP5	OP6	OP7
0 (1)	OB10	OB20	OB30	OB40	OB50	OB60	OB70
1 (2)	OB11	OB21	OB31	OB41	OB51	OB61	OB71
2 (4)	OB12	OB22	OB32	OB42	OB52	OB62	OB72
3 (8)	OB13	OB23	OB33	OB43	OB53	OB63	OB73
4 (16)	OB14	OB24	OB34	OB44	OB54	OB64	OB74
5 (32)	OB15	OB25	OB35	OB45	OB55	OB65	OB75
6 (64)	OB16	OB26	OB36	OB46	OB56	OB66	OB76
7 (128)	OB17	OB27	OB37	OB47	OB57	OB67	OB77
Total:	**Sum**	**Sum**	**Sum**	**Sum**	**Sum**	**Sum**	**Sum**

CL 36532044_037.eps
160603

Figure 8-3 Option Byte calculation

Table 8-2 Options settings

Type number	OP1	OP2	OP3	OP4	OP5	OP6	OP7
14PT3336/78	16	71	65	64	194	64	114
20PT3336/78	16	71	65	64	194	64	114

Option Bit Assignment
Following are the option bit assignments for all L03 software clusters.

Option bit description:

Option Byte			Option Bit Definition	
OP #		**Assignment**	**Bit = [0]**	**Bit = [1]**
1	OBx0	CHINA or NTSC_ONLY	Tuning is not for China set or NTSC only set, or this option bit is not applicable	Tuning is for China set or NTSC only set
	OBx1	VIRGIN_MODE	Virgin mode is disabled or not applicable	Virgin mode is enabled. Plug and Play menu item will be displayed to perform installation at the initial start-up of the TV when VIRGIN_MODE is set to 1. After installation is finished, this option bit will be automatically set to 0
	OBx2	UK_PNP	UK's default Plug and Play setting is not available or not applicable	UK's default Plug and Play setting is available. When UK_PNP and VIRGIN_MODE are set to 1 at the initial setup, LANGUAGE = ENGLISH, COUNTRY = GREAT BRITAIN and after exiting from menu, VIRGIN_MODE will be set automatically to 0 while UK_PNP remains 1
	OBx3	ACI	ACI feature is disabled or not applicable	ACI feature is enabled
	OBx4	ATS (EU), or FINE_TUNING (NAFTA), or LANGUAGE_MALAY (AP)	Feature is disabled or not applicable	Feature is enabled
	OBx5	LNA	Auto Picture Booster is not available or not applicable	Auto Picture Booster is available
	OBx6	FM_RADIO	FM radio feature is disabled or not applicable	FM radio feature is enabled
	OBx7	PHILIPS_TUNER	ALPS / MASCO compatible tuner is in use	Philips compatible tuner is in use
2	OBx0	HUE	Hue/Tint Level is disabled or not applicable	Hue/Tint Level is enabled
	OBx1	COLOR_TEMP	Colour Temperature is disabled or not applicable	Colour Temperature is enabled
	OBx2	CONTRAST_PLUS	Contrast+ is disabled or not applicable	Contrast+ is enabled
	OBx3	TILT	Rotate Picture is disabled or not applicable	Rotate Picture is enabled
	OBx4	NOISE_REDUCTION	Noise Reduction (NR) is disabled or not applicable	Noise Reduction (NR) is enabled
	OBx5	CHANNEL_NAMING	Name FM Channel is disabled or not applicable	Name FM Channel is enabled
	OBx6	SMART_PICTURE	Smart Picture is disabled or not applicable	Smart Picture is enabled
	OBx7	SMART_SOUND	Smart Sound is disabled or not applicable	Smart Sound is enabled
3	OBx0	AVL	AVL is disabled or not applicable	AVL is enabled
	OBx1	WSSB (for EU) or HOME_CINEMA (for AP)	WSSB is disabled or not applicable	WSSB is enabled
	OBx2	WIDE_SCREEN	Software is used for 4:3 set or not applicable	Software is used for 16:9 set
	OBx3	Virtual Dolby		
	OBx4	MSP34X5_VOL_CTRL	Not applicable	applicable
	OBx5	COMPRESS_16_9	COMPRESS 16:9 selection is not applicable. Item should not be in the FORMAT menu list	COMPRESS 16:9 selection is applicable. Item should not be in the FORMAT menu list
	OBx6	EXPAND_4_3	Expand 4:3 selection is not applicable. Item should not be in the FORMAT menu list,	Expand 4:3 selection is applicable. Item should be in the FORMAT menu list
	OBx7	EW_FUNCTION	EW function is disabled. In this case, only Expand 4:3 is allowed, Compress 16:9 is not applicable	EW function is enabled. In this case, both Expand 4:3 and Compress 16:9 are applicable.
4	OBx0	STEREO_NON_DBX	For AP_NTSC, chip TDA 9853 is not present	For AP_NTSC, chip TDA 9853 is present
	OBx1	STEREO_DBX	For AP_NTSC, chip MSP 3445 is not present	For AP_NTSC, chip MSP 3445 is present
	OBx2	STEREO_PB	For AP_PAL, chip MSP3465 is not present	For AP_PAL, chip MSP3465 is present
	OBx3	STEREO_NICAM_2CS	For EU and AP_PAL, chip MSP 3415 is not present	For EU and AP_PAL, chip MSP 3415 is present
	OBx4	DELTA_VOLUME	Delta Volume Level is disabled or not applicable	Delta Volume Level is enabled
	OBx5	ULTRA_BASS	Ultra Bass is disabled or not applicable	Ultra Bass is enabled
	OBx6	VOLUME_LIMITER	Volume Limiter Level is disabled or not applicable	Volume Limiter Level is enabled
	OBx7	INCR_SUR	Incredible Surround feature is disabled	Incredible Surround feature is enabled
5	OBx0	PIP or CLOCK	Feature is disabled or not applicable	Feature is enabled
	OBx1	HOTEL_MODE	Hotel mode is disabled or not applicable	Hotel mode is enabled
	OBx2	SVHS	SVHS source is not available	SVHS source is available
	OBx3	CVI	CVI source is not available	CVI source is available
	OBx4	AV3	Side/Front AV3 source is not present	Side/Front AV3 source is present
	OBx5	AV2	AV2 source is not present	AV2 source is present
	OBx6	AV1	AV1 source is not present	AV1 source is present
	OBx7	NTSC_PLAYBACK	NTSC playback feature is not available	NTSC playback feature is available
6	OBx0	BASS_TREBLE	Feature is not available	Feature is available
	OBx1	SMART_TEXT	Smart Text Mode and Favourite Page are disabled or not applicable	Smart Text Mode and Favourite Page are enabled
	OBx2	SMART_LOCK	Child Lock and Lock Channel are disabled or not applicable for EU	Child Lock and Lock Channel are enabled for EU
	OBx3	VCHIP (LATAM & NAFTA & NAFTA) / TXT_1PG (EU)	Feature is disabled	Feature is enabled
	OBx4	WAKEUP_CLOCK	Wake up clock feature is disabled or not applicable	Wake up clock feature is enabled
	OBx5	SMART_CLOCK	Smart Clock Using Teletext and Smart Clock Using PBS is disabled or not applicable	Smart Clock Using Teletext and Smart Clock Using PBS is enabled. For NAFTA, menu item AUTOCHRON is present in the INSTALL submenu
	OBx6	SMART_SURF	Smart Surf feature is disabled or not applicable	Smart Surf feature is enabled
	OBx7	PERSONAL_ZAPPING	Personal Zapping feature is disabled or not applicable	Personal Zapping feature is enabled

Option Byte			Option Bit Definition	
OP #		Assignment	Bit = [0]	Bit = [1]
7	OBx0	SOUND_SYSTEM_AP_3 / MULTI_STANDARD_EUR / SYSTEM_LT_2,		
	OBx1	SOUND_SYSTEM_AP_2 / WEST_EU /SYSTEM_LT_1,	OB70,OB71: These two option bits are allocated for LATAM system selection. (00: NTSC-M; 01: NTSC-M, PAL-M; 10: NTSC-M, PAL-M, and PAL-N; 11: NTSC-M, PAL-M, PAL-N, and PAL-BG)	
	OBx2	SOUND_SYSTEM_AP_1	OB70,OB71,OB72;These three option bits are allocated for AP_PAL sound system selection. (000: BG; 001: BG / DK; 010: I / DK; 011: BG / I / DK; 100: BG / I / DK / M)	
	OBx3	COLOR_SYSTEM_AP (This option bit is allocated for AP-PAL colour system selection)	Auto, PAL 4.43, NTSC 4.43, and NTSC 3.58	Auto, PAL 4.43, NTSC 4.43, NTSC 3.58, and SECAM
	OBx4	SIGNAL_STRENGTH / DVD WAKEUP TIMER (DVD COMBI), 3D_COMBFILTER (NAFTA)		
	OBx5	LNA_PP (for L01 AP cluster), VOICE_CONTROL		
	OBx6	ACTIVE_CONTROL		
	OBx7	TIME_WIN1	The time window is set t 1.2 s.	The time window is set to 2 s

8.3.2 Tuner

Note: Described alignments are only necessary when the NVM (part reference number 7641) is replaced.

IFPLL
This adjustment is auto-aligned. Therefore, no action is required (default= "30").

AGC (AGC take over point)
1. Connect the RF output of a video pattern generator to the antenna input.
2. Input a colour bar test pattern to the television set.
3. Set the amplitude of the video pattern generator to 10 mV and set the frequency to 475.25 mHz (PAL/SECAM) or 61.25 MHz (NTSC).
4. Connect a DC multimeter to pin 1 of the tuner (item 1000 on the main chassis).
5. Activate SDAM by pressing the following key sequence on the remote control transmitter: **0 6 2 5 9 6** directly followed by the MENU button (do not allow the display to time out between entries while keying the sequence).
6. Use the MENU UP/DOWN keys to highlight the TUNER sub menu.
7. Press the MENU LEFT/RIGHT keys to enter the TUNER sub menu.
8. Use the MENU UP/DOWN keys to select AGC.
9. Use the MENU LEFT/RIGHT keys to adjust the AGC value (default value is "32") until the DC-voltage at pin 1 of the tuner lies is 3.3 V.
10. Press the MENU button to return to the top level SDAM menu.
11. To ensure the AGC change takes effect:
    – Turn the television set 'off' by using the 'POWER' button on the remote control transmitter or the local keyboard.
    – Disconnect the television set from AC power for at least ten seconds.
    – Reconnect the television set to AC power.
    – Turn the television set 'on' by using the 'POWER' button on the remote control transmitter or the local keyboard.

SL (Slicing Level)
This adjustment sets the sync slicing level for non-standard signals. You must turn it 'on' to have no picture instability in premium decoded cable channels.
- OFF: slicing level dependent on noise level.
- ON: fixed slicing level of 70%.

To adjust SL:
1. Activate SDAM by pressing the following key sequence on the remote control transmitter: **0 6 2 5 9 6** directly followed by the MENU button (do not allow the display to time out between entries while keying the sequence).
2. Use the MENU UP/DOWN keys to highlight the TUNER sub menu.
3. Press the MENU LEFT/RIGHT keys to enter the TUNER sub menu.
4. Use the MENU UP/DOWN keys to select SL.
5. Use the MENU LEFT/RIGHT keys to toggle SL 'Off' and 'On'.
6. Press the MENU button to return to the top level SDAM menu.
7. To ensure the SL setting is saved:
    – Turn the television set 'off' by using the 'POWER' button on the remote control transmitter or the local keyboard.
    – Disconnect the television set from AC power for at least ten seconds.
    – Reconnect the television set to AC power.
    – Turn the television set 'on' by using the 'POWER' button on the remote control transmitter or the local keyboard.

CL (Cathode Drive Level)
Fixed value is "7".

8.3.3 White Tone

The values of the 'black cut-off level' can be adjusted in the 'WHITE TONE' sub menu.
Normally, no alignment is needed for 'WHITE TONE', and the given default values are used.

Default settings for **NORMAL** (colour temperature= 11500 K):
NORMAL RED = 32 dec. (20 hex)
NORMAL GREEN = 32 dec. (20 hex)
NORMAL BLUE = 32 dec. (20 hex)

To adjust NORMAL RED, NORMAL GREEN, and NORMAL BLUE:
1. Connect the RF output of a video pattern generator (e.g. PM5418) to the antenna input.
2. Set the amplitude of the video pattern generator to at least 1 mV and set the frequency to 475.25 MHz (PAL/SECAM) or 61.25 MHz (NTSC).
3. Input a "100 IRE white" pattern to the television set.
4. Activate SDAM by pressing the following key sequence on the remote control transmitter: **0 6 2 5 9 6** directly followed by the MENU button (do not allow the display to time out between entries while keying the sequence).
5. Use the MENU UP/DOWN keys to highlight the WHITE TONE sub menu.
6. Press the MENU LEFT/RIGHT keys to enter the WHITE TONE sub menu.
7. Use the MENU UP/DOWN keys to select NORMAL RED, NORMAL GREEN, or NORMAL BLUE.
8. Set the Minolta CA100 colour analyser (or equivalent) in RGB mode, and set all colour temperature settings to their default values.
9. Place the colour sensor of the meter in the middle of the screen.
10. Set the meter in "T-dUV-Y" mode, and set CONTRAST to make the light output "Y" on the meter 90 nit $\pm$ 15%
11. Use the MENU LEFT/RIGHT keys to adjust the value of NORMAL GREEN and/or NORMAL BLUE.
12. When all desired changes to the WHITE TONE sub menu values are made, press the MENU button to return to the top level SDAM menu.
13. To ensure the WHITE TONE settings are saved:
    – Turn the television set 'off' by using the 'POWER' button on the remote control transmitter or the local keyboard.
    – Disconnect the television set from AC power for at least ten seconds.
    – Reconnect the television set to AC power.
    – Turn the television set 'on' by using the 'POWER' button on the remote control transmitter or the local keyboard.

8.3.4 Geometry

Introduction

The geometry alignment menu contains several items for correct picture geometry alignment.

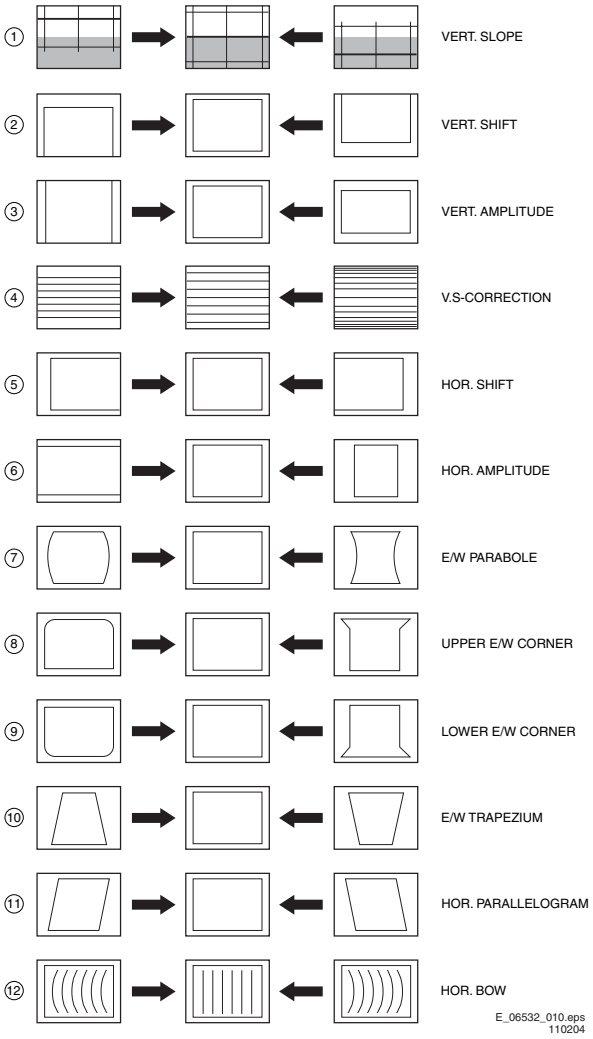

Figure 8-4 Geometry alignments

1. Connect the RF output of a video pattern generator to the antenna input.
2. Input a crosshatch test pattern to the television set.
3. Set the amplitude of the video pattern generator to at least 1 mV and set the frequency to 475.25 MHz (PAL/SECAM) or 61.25 MHz (NTSC).
4. Press the SMART PICTURE button on the remote control transmitter repeatedly to choose PERSONAL or MOVIES picture mode.
5. Activate SDAM by pressing the following key sequence on the remote control transmitter: **0 6 2 5 9 6** directly followed by the MENU button (do not allow the display to time out between entries while keying the sequence).
6. Use the MENU UP/DOWN keys to highlight the GEOMETRY sub menu.
7. Press the MENU LEFT/RIGHT keys to enter the GEOMETRY sub menu.
8. Use the MENU UP/DOWN keys to highlight either the HORIZONTAL sub menu or the VERTICAL sub menu.
9. Press the MENU LEFT/RIGHT keys to enter either the HORIZONTAL sub menu or the VERTICAL sub menu.
10. Use the MENU UP/DOWN keys to select items in the HORIZONTAL sub menu or the VERTICAL sub menu.
11. Use the MENU LEFT/RIGHT keys to adjust the values of items in the HORIZONTAL and VERTICAL sub menus.
12. When all desired changes to the HORIZONTAL and VERTICAL sub menu values are made, press the MENU button twice to return to the top level SDAM menu.
13. To ensure the GEOMETRY settings are saved:
    - Turn the television set 'off' by using the 'POWER' button on the remote control transmitter or the local keyboard.
    - Disconnect the television set from AC power for at least ten seconds.
    - Reconnect the television set to AC power.
    - Turn the television set 'on' by using the 'POWER' button on the remote control transmitter or the local keyboard.

The following alignments can be performed in the GEOMETRY sub menu:

Horizontal Alignments:

- Horizontal Shift (HSH). Select Horizontal Shift to centre the picture on the screen.
- Picture Width (PW). Aligns the width of the picture.

Vertical Alignments:

- Vertical slope (VSL). Aligns the picture so the proportions are the same at the top and bottom of the screen. This alignment must be performed first, before all other vertical alignments. Turning SBL, 'on' will assist in performing this alignment.
- Vertical Amplitude (VAM). Aligns the height of the picture (other vertical alignments are NOT compensated).
- Vertical S-Correction (VSC). Aligns the vertical linearity, so that the vertical intervals of the grid-patterns are the same over the entire height of the screen.
- Vertical Shift (VSH). Aligns the vertical centre of the picture to the vertical centre of the CRT. After performing this alignment, it may be necessary to perform the VAM alignment again.
- Service blanking (SBL). Turns the blanking of the lower half of the screen 'on' or 'off' (to be used in combination with the vertical slope alignment).

Methods of Adjustment

Vertical Amplitude and Position

1. Select SERVICE BLANKING (SBL) and set it to 1. The lower half of the picture will be blanked.
2. Press the MENU UP/DOWN buttons to select VERTICAL SLOPE (VSL).
3. Align VSL to start the blanking exactly at the horizontal white line at the centre of the test circle (align the bottom of the screen so that castellations just disappear).
4. Press the MENU UP/DOWN buttons to select SBL and set it back to 0. The full picture reappears.
5. Select VERTICAL AMPLITUDE (VAM) and align the picture height to approximately 13.0 - 13.1 blocks (align the top of the screen so that castellations just disappear).
6. Select VERTICAL SHIFT (VSH) and align for vertical centring of the picture on the screen.
7. Repeat the last two steps if necessary.

Horizontal Phase

1. Set PW to "0".
2. Select Horizontal Shift (HSH) to centre the picture on the screen.

Horizontal and Vertical Shift Offset for NTSC (TriNorma and PAL chassis)

1. Align the set for VSH and HSH (according to above mentioned procedures) with a PAL system signal.
2. Change the signal to NTSC system and adjust HORIZONTAL SHIFT OFFSET (H60) and VERTICAL SHIFT OFFSET (V60) to centre the picture on the screen.
3. Repeat if necessary.

The table below lists the default GEOMETRY values for the different television sets.

Table 8-3 Default geometry values

Alignment	Description	14”	20”
PW	Picture Width	0	0
HSH	Horizontal Shift	27	27
VSL	Vertical Slope	35	35
VAM	Vertical Amplitude	35	35
VSC	Vertical S Correction	23	23
VSH	Vertical Shift	40	40
H60	Horizontal Shift Offset (NTSC)	7	7
V60	Vertical Shift Offset (NTSC)	-1	-1

9. Circuit Descriptions, List of Abbreviations, and IC Data Sheets

Index of this chapter:

9.1 Introduction
9.2 Power Supply
9.3 Abbreviation List

Notes:

- Only **new** circuits (compared to the L03.2 chassis) are described in this chapter. For the other circuit descriptions, see the L03.2L AA manual.
- Figures can deviate slightly from the actual situation, due to different set executions.
- For a good understanding of the following circuit descriptions, please use the block diagram in chapter 6, and/or the electrical diagrams in chapter 7. Where necessary, you will find a separate drawing for clarification.

9.1 Introduction

Basically all schematic diagrams for both (L03.2L &L03.6L) are 95% the same, except the A1 power supply. The control IC is replaced by a Sanken IC (Quasi-Resonant Switching Regulator).

9.2 Power Supply

The topology of the power supply is fly back (or buck boost). It is able to operate in 3 modes namely:

1. Quasi-Resonant (at high load, full beam current).
2. Bottom Skip (at low load, min beam current).
3. Auto Burst Mode with fixed frequency of 22kHz (at stand-by).

9.2.1 Introduction

The IC 7520 STR-W6753 is a Hybrid Integrated Circuit (HIC) with a built-in power MOSFET and a control IC designed for quasi-resonant type switch-mode power supplies (SMPS). In normal operation, the HIC provides high efficiency and low EMI noise with bottom-skip quasi-resonant operation during light output loads. Low power consumption is also achieved by blocking (intermittent) oscillation during an auto-burst mode, and reduced even further in a manually triggered (clamping an output voltage) stand-by mode.

9.2.2 Start-Up

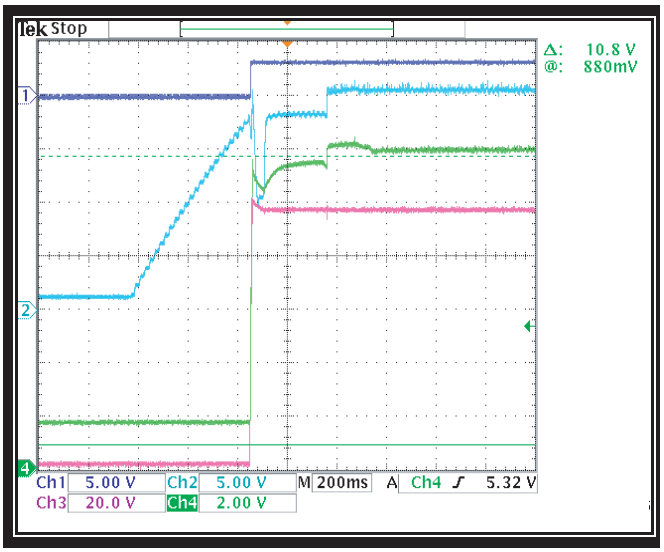

G_16560_001.eps
130706

Figure 9-1 Power Supply Start-Up (Power-ON)

When the power supply is first switched “on”, the mains elcap (item 2503) will be charged to the mains supply voltage (V_{ac} x 1.4). At the same time, capacitor 2525 will be charged by the bleeder resistor 3507 and clamping diode 6581 to $V_{cc(start)}$ of 18.2V. Once V_{cc} reaches 18.2V, the IC will soft start by charging 2526 until it reaches 1V. When 2526 reaches 1V, the IC will start its normal switching. The voltage of V_{cc} is proportional to the emitter current of 7515. Once V_{bat} is constant, $I_{emitter}$ will be constant and V_{cc} will be constant.

9.2.3 Normal Operation

During normal operation, the IC is constantly adjusting the peak drain current of the internal MOSFET to match the load condition which is depending on the V_{bat} value. The voltage on pin 6 is “low” during overload and “high” during low load.

The emitter current of 7515 is converted into voltage inside the IC through a resistor. During light load (low beam), the IC will switch to bottom-skip quasi resonant mode to reduce the switching losses of the internal MOSFET.

9.2.4 Quasi-resonant Operation to Bottom-skip Operation

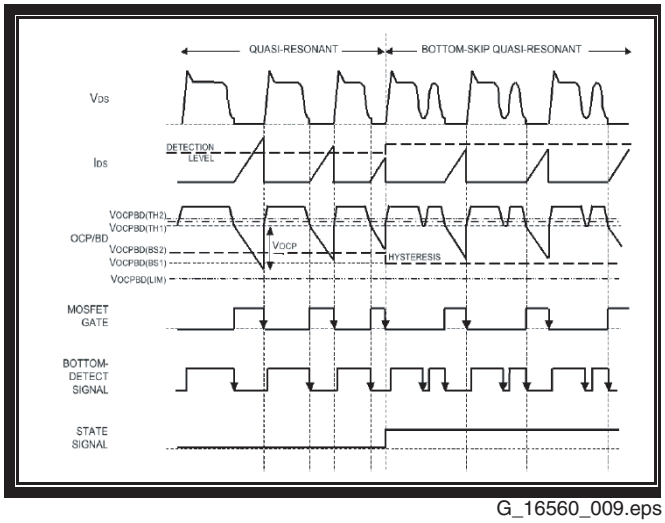

G_16560_009.eps
130706

Figure 9-2 Quasi-resonant to bottom-skip operation timing

Quasi-resonance is operated under the absolute condition of V_{OCP} greater than $V_{OCPBD(BS2)}$. When the load becomes lighter, and the drain current drops to make V_{OCP} less than $V_{OCPBD(BS2)}$, the operation is shifted to the bottom-skip mode, and the reference voltage is automatically changed to $V_{OCPBD(BS1)}$. Figure above shows shift timing from quasi-resonant operation to bottom-skip operation.

9.2.5 Bottom-skip Operation to Quasi-resonant Operation

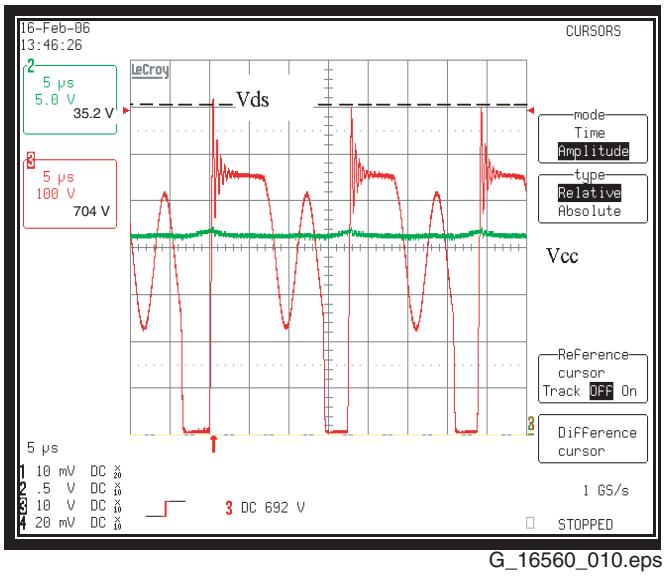

G_16560_010.eps
240706

Figure 9-3 Power Supply working in Bottom-skip Quasi resonant mode

The bottom-skip is operated under the absolute condition of V_{OCP} less than $V_{OCPBD(BS2)}$. When the load becomes heavier and the drain current increases to make V_{OCP} greater than $V_{OCPBD(BS2)}$, the operation is shifted to the quasi-resonant mode, and the reference voltage is automatically changed to $V_{OCPBD(BS2)}$. V_{OCP} is the OCP/BD pin voltage at the falling edge of the MOSFET gate voltage. As described above, the reference voltage for bottom-skip operation, $V_{OCPBD(BS1)}$ and $V_{OCPBD(BS2)}$, has hysteresis to make a stable operation shift as shown in figure below.

9.2.6 Burst Operation

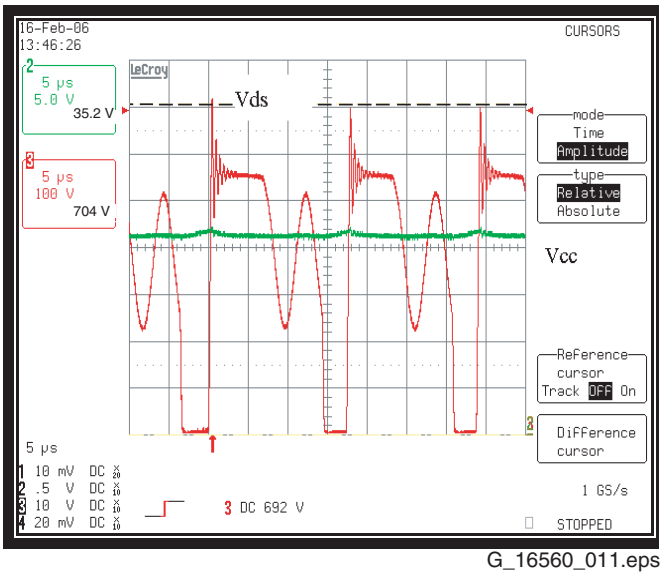

G_16560_011.eps
240706

Figure 9-4 Power Supply working in Burst mode

During burst mode, the signal "STD_CON" is pulled “low” by the UOC, and the emitter current of 7515 is increased which caused the IC to go into "low load protection and auto burst mode”. In the burst mode, the value of V_{bat} and V_{aux} is lowered to 65V and 6V respectively. The $V_{cc(start)}$ during burst mode is 11.2V and $V_{cc(off)}$ is 9.7V. This is different from normal start-up where $V_{cc(start)}$ is 18.2V and $V_{cc(off)}$ is 9.6V.

9.3 Abbreviation List

2CS	2 Carrier Sound
ACI	Automatic Channel Installation: algorithm that installs TV channels directly from a cable network by means of a predefined TXT page
ADC	Analogue to Digital Converter
AFC	Automatic Frequency Control: control signal used to tune and lock to the correct frequency
AFT	Automatic Fine Tuning
AGC	Automatic Gain Control (feedback) signal to the tuner. This is a circuit with a constant output amplitude, regardless of the input
AM	Amplitude Modulation
AP	Asia Pacific
AR	Aspect Ratio: 4 by 3 or 16 by 9
ATS	Automatic Tuning System
AV	External Audio Video
AVL	Automatic Volume Level control
BCL	Beam Current Limiter
B/G	Monochrome TV system. Sound carrier distance is 5.5 MHz. B = VHF-band, G = UHF-band
BTSC	Broadcast Television Standard Committee. Multiplex FM stereo sound system, originating from the USA and used e.g. in LATAM and AP-NTSC countries
CC	Closed Captioning; This is a digital addition to analogue TV signals that contains textual information relevant to the TV signal. For NTSC, the information is transmitted with line 21 and 284 during the Vertical Blank Interval (VBI)
ComPair	Computer aided rePair. A tool for diagnosing a TV through a PC controlled interface
CRT	Cathode Ray Tube (or picture tube)
CSM	Customer Service Mode
CTI	Colour Transient Improvement: manipulation of the steepness of chroma transients
CVBS	Composite Video and Blanking Signal; A single video signal that contains luminance, colour, and timing information
CVI	Component Video Input
DAC	Digital to Analogue Converter
DBX	Dynamic Bass Expander or noise reduction system in BTSC
D/K	Monochrome TV system. Sound carrier distance is 6.5 MHz. D = VHF-band, K = UHF=band
DFU	Directions For Use: Owner's manual
DNR	Dynamic Noise Reduction; noise reduction feature of the set
DSP	Digital Signal Processing
DST	Dealer Service Tool: special remote control designed for dealers to enter e.g. service mode (a DST-emulator is is available in ComPair)
DVD	Digital Versatile Disc
EEPROM	Electrically Erasable and Programmable Read Only Memory
EHT	Extreme High Tension; the voltage between the cathode and the shadow mask that accelerates the electrons towards the screen (around 25 kV)
EHT-INFO	Extra High Tension INFOrmation, used for contrast reduction, vertical and horizontal amplitude correction, beam current protection, and flash detection
EMI	Electro Magnetic Interference
EPG	Electronic Program Guide; System used by broadcasters to transmit TV guide information (= NexTView)
EU	Europe
EW	East West, related to horizontal deflection of the set
EXT	EXTernal (source), entering the set via SCART or Cinches
FBL	Fast BLanking; DC signal accompanying RGB signals. To blank the video signal when it is going from the right side of the screen to the left side. The video level is brought down below the black video level
FILAMENT	Filament of CRT
FM	Field Memory; A memory chip that is capable of storing one or more TV picture fields, or: Frequency Modulation; A technique that sends data as frequency variations of a carrier signal
H	H_sync to the module
HP	Head phone
I	Monochrome TV system. Sound carrier distance is 6.0 MHz. VHF- and UHF-band
I^2C	Inter IC bus (also called IIC)
IF	Intermediate Frequency
IIC	Inter IC bus (also called I^2C)
ITV	Institutional TV
LATAM	LATin AMerica
LED	Light Emitting Diode; A semiconductor diode that emits light when a current is passed through it
L/L'	Monochrome TV system. Sound carrier distance is 6.5 MHz. L' is Band I, L is all bands except for Band I
LS	Loudspeaker
MOSFET	Metal Oxide Semiconductor Field Effect Transistor
M/N	Monochrome TV system. Sound carrier distance is 4.5 MHz. M= 525 lines @ 60 Hz, N= 625 lines @ 50 Hz
NC	Not Connected
NICAM	Near Instantaneous Companded Audio Multiplexing. This is a digital sound system, mainly used in Europe.
NTSC	National Television Standard Committee. Colour system mainly used in North America and Japan. Colour carrier NTSC M/N = 3.579545 MHz, NTSC 4.43 = 4.433619 MHz (this is a VCR norm, it is not transmitted off-air)
NVM	Non Volatile Memory: IC containing data such as alignment values, preset stations
OB	Option Bit
OC	Open Circuit
OP	OPtion Byte
OSD	On Screen Display
PAL	Phase Alternating Line. Colour system mainly used in West Europe (colour carrier = 4.433619 MHz) and South America (colour carrier PAL M = 3.575612 MHz and PAL N = 3.582056 MHz)
PCB	Printed Circuit board (also called PWB or CBA)
PLL	Phase Locked Loop. Used for e.g. FST tuning systems. The customer

	can give in directly the desired frequency
POR	Power-On Reset; Signal to reset the µP
PTP	Picture Tube Panel (or CRT-panel)
RAM	Random Access Memory
RC	Remote Control transmitter
RGB	Red, Green, and Blue colour space; The primary colour signals for TV. By mixing levels of R, G, and B, all colours (Y/C) are reproduced
ROM	Read Only Memory
SAP	Secondary Audio Program; Generally used to transmit audio in a second language
SC	Sandcastle: two-level pulse derived from sync signals
S/C	Short Circuit
SCL	Serial Clock I^2C
SDA	Serial Data I^2C
SDAM	Service Default / Alignment Mode
SECAM	SÉquence Couleur Avec Mémoire; Colour system mainly used in France and East Europe. The chroma is FM modulated and the R-Y and B-Y signals are transmitted line sequentially. Colour carriers= 4.406250 MHz and 4.250000 MHz
SIF	Sound Intermediate Frequency
SS	Small Screen
SMPS	Switch Mode Power Supply
STBY	STand-BY
SVHS	Super Video Home System
SW	Software or Sub woofer of Switch
THD	Total Harmonic Distortion
TriNorma	Video standard. Combination of PAL N, PAL M, NTSC M
TXT	Teletext; TXT is a digital addition to analogue TV signals that contain textual and graphical information (25 rows x 40 columns). The information is transmitted within the first 25 lines during the Vertical Blank Interval (VBI)
µP	Microprocessor
UOC	Ultimate One Chip
V	V_sync
V_BAT	Main supply voltage for the deflection stage (mostly 141 V)
V-chip	Violence chip. Adds content filtering capabilities to NTSC video
VCR	Video Cassette Recorder
WYSIWYR	What You See Is What You Record: record selection that follows main picture and sound
XTAL	Quartz crystal
Y/C	Y consists of luminance signal, blanking level and sync; C consists of chroma (colour) signal

10. Spare Parts List

Not available at the time of publishing

11. Revision List

Manual xxxx xxx xxxx.0

- First release.